Pioneering for You

Wilo-Atmos GIGA-N

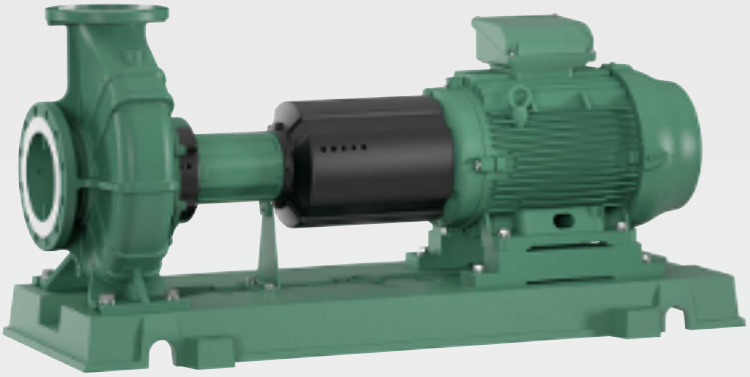

en Installation and operating instructions

6074707 • Ed.01/2019-04



Table of contents

1 General information 5
1.1 About these instructions 5
1.2 Copyright 5
1.3 Subject to change 5

2 Safety 5
2.1 Identification of safety instructions 5
2.2 Personnel qualifications 6
2.3 Electrical work 6
2.4 Transport 7
2.5 Installing/dismantling 7
2.6 During operation 7
2.7 Maintenance tasks 8
2.8 Drive: IEC standard motor 9
2.9 Operator responsibilities 9

3 Application/use 9
3.1 Intended use 9
3.2 Improper use 9

4 Product description 9
4.1 Design 9
4.2 Operation with frequency converter 10
4.3 Technical data 10
4.4 Type key 11
4.5 Scope of delivery 11
4.6 Accessories 11
4.7 Anticipated noise levels 11
4.8 Permissible forces and torques on the pump flanges 13

5 Transportation and storage 13
5.1 Delivery 13
5.2 Transport 14
5.3 Storage 15

6 Installation and electrical connection 15
6.1 Personnel qualifications 16
6.2 Operator responsibilities 16
6.3 Preparing the installation 16
6.4 Setting up the pump by itself (variant B, Wilo variant key) 16
6.5 Installing the pump unit on a base 17
6.6 Pipework 18
6.7 Aligning the unit 19
6.8 Electrical connection 23

7 Commissioning 24
7.1 Personnel qualifications 25
7.2 Filling and venting 25
7.3 Checking the direction of rotation 25
7.4 Switching on the pump 26
7.5 Switching frequency 27

8 Shutdown 27
8.1 Switching off the pump and temporary shutdown 27
8.2 Shutdown and storage 27

9 Maintenance/repair 27
9.1 Personnel qualifications 28
9.2 Operation monitoring 28
9.3 Maintenance tasks 29

9.4 Draining and cleaning 29
9.5 Dismantling 29
9.6 Installation 31

10 Faults, causes and remedies 34
10.1 Faults 35
10.2 Causes and remedies 35

11 Spare parts 36
11.1 Spare parts list 37

12 Disposal 38
12.1 Oils and lubricants 38
12.2 Water-glycol mixture 38
12.3 Protective clothing 38
12.4 Information on the collection of used electrical and electronic products 38

1 General information

1.1 About these instructions

These installation and operating instructions are an integral part of the device. Read these instructions before commencing work and keep them in an accessible place at all times. Strict adherence to these instructions is a requirement for intended use and correctly operating the device. All specifications and markings on the device must be observed. These installation and operating instructions correspond to the relevant version of the device and the underlying safety standards that apply at the time of going to print.

The language of the original operating instructions is German. All other languages of these instructions are translations of the original operating instructions.

1.2 Copyright

These installation and operating instructions have been copyrighted by the manufacturer. The contents, of whatever type, may not be reproduced or distributed, or used for purposes of competition and shared with others.

1.3 Subject to change

The manufacturer reserves the right to make technical modifications to the device or individual components. The illustrations used may differ from the original and are intended as an example representation of the device.

2 Safety

This chapter contains basic information for the individual phases of the life cycle. Failure to observe this information carries the following risks:

- → Injury to persons from electrical, mechanical and bacteriological factors as well as electromagnetic fields
- → Environmental damage from discharge of hazardous substances
- → Property damage
- → Failure of important functions of the product

Failure to observe the information contained herein will result in the loss of claims for damages.

The instructions and safety instructions in the other chapters must also be observed!

2.1 Identification of safety instructions

These installation and operating instructions set out safety instructions for preventing personal injury and damage to property. These safety instructions are shown differently:

- → Safety instructions relating to personal injury start with a signal word, are **preceded by a corresponding symbol** and are shaded in grey.



DANGER

Type and source of the danger!

Consequences of the danger and instructions for avoidance.

- → Safety instructions relating to property damage start with a signal word and are displayed **without** a symbol.

CAUTION

Type and source of the danger!

Consequences or information.

Signal words

- → **DANGER!**
  Failure to observe the safety instructions will result in serious injuries or death!
- → **WARNING!**
  Failure to follow the instructions can lead to (serious) injuries!
- → **CAUTION!**
  Failure to follow the instructions can lead to property damage and a possible total loss.
- → **NOTICE!**
  Useful information on handling the product

Symbols

These instructions use the following symbols:


Danger – high voltage


General warning symbol


Warning – danger of crushing


Warning – risk of cutting injuries


Warning – hot surfaces


Warning – high pressure


Warning – suspended loads


Personal protective equipment: wear a safety helmet


Personal protective equipment: wear foot protection


Personal protective equipment: wear hand protection


Personal protective equipment: wear mouth protection


Personal protective equipment: wear safety goggles


Useful information

2.2 Personnel qualifications

Personnel must:
- → Be instructed about locally applicable regulations governing accident prevention.
- → Have read and understood the installation and operating instructions.

Personnel must have the following qualifications:
- → Electrical work: A qualified electrician must carry out the electrical work.
- → Installation/dismantling must be carried out by a qualified technician who is trained in the use of the necessary tools and fixation materials.

Definition of "qualified electrician"

A qualified electrician is a person with appropriate technical education, knowledge and experience who can identify **and** prevent electrical hazards.

2.3 Electrical work

- → Electrical work must be carried out by a qualified electrician.
- → When connecting to the mains, comply with the locally applicable laws and regulations of the local energy supply company.

- Before commencing work, disconnect the device from the mains and secure it against being switched on again without authorisation.
- Train personnel on how to make the electrical connection as well as on the methods for switching off the device.
- Observe the technical information in these installation and operating instructions as well as on the rating plate.
- Earth the device.
- Observe the manufacturer's specifications when connecting to electrical switching systems.
- Comply with the specifications on electro-magnetic compatibility when using electronic start-up controllers (e.g. soft starter or frequency converter). If required, take into account special measures (shielded cables, filters, etc.).
- Replace defective connection cables. Contact customer service.

2.4 Transport

- Wear protective equipment:
  - Safety gloves for protection against cuts
  - Safety shoes
  - Sealed safety goggles
  - Safety helmet (when using lifting equipment)
- Only use legally specified and approved lifting gear.
- Select lifting gear based on the available conditions (weather, attachment point, load, etc.).
- Always attach the lifting gear to the designated attachment points (lifting eyes).
- Position the lifting equipment in a way that ensures stability during use.
- When using lifting equipment, a second person must be present to coordinate the procedure if required (e.g. if the operator's field of vision is blocked).
- Persons must not stand underneath suspended loads. Do **not** move suspended loads over workplaces where people are present.

Please note the following information during transport and prior to installation:

- Do not reach into suction ports, discharge ports or other openings.
- Avoid the penetration of foreign objects. To this end, leave the protective covers or packaging on until they have to be removed for installation.
- Packaging and covers may be removed from suction or outlet openings for inspection purposes. They must be put back on afterwards to protect the pump and ensure safety.

2.5 Installing/dismantling

- Wear the following protective equipment:
  - Safety shoes
  - Safety gloves for protection against cuts
  - Safety helmet (when using lifting equipment)
- Comply with laws and regulations on work safety and accident prevention in force at the site of installation.
- The procedure described in the installation and operating instructions for shutting down the product/unit must be strictly observed.
- Disconnect the device from the mains and secure it against being switched on again without authorisation.
- All rotating parts must be at a standstill.
- Close the gate valve in the inlet and in the pressure pipe.
- Provide adequate aeration in enclosed spaces.
- Clean the device thoroughly. Disinfect devices that use fluids hazardous to health!
- Make sure that there is no risk of explosion when carrying out any type of welding work or work with electrical devices.

2.6 During operation

- Wear protective equipment:
  - Safety shoes
  - Safety helmet (when using lifting equipment)
- The work area in which the device is used is not a recreational area. No persons are allowed in the work area during operation.
- The operator must report any faults or irregularities to a line manager immediately.
- If hazardous defects occur, the operator must immediately deactivate the device. Hazardous defects include:
  - Malfunction of safety and monitoring devices
  - Damage to housing parts
  - Damage to electrical equipment
- Open all gate valves in the piping on the suction and pressure side.

- → Only carry out the maintenance tasks described in these installation and operating instructions.
- → Only genuine spare parts from the manufacturer may be used for repairs, replacements, add-ons and modifications. Use of parts other than original parts releases the manufacturer from any liability.
- → Collect any leakage of fluids and operating fluids immediately and dispose of it according to the locally applicable guidelines.
- → Tools and other objects should only be kept in their designated places.

Thermal hazards

Most drive surfaces can become hot during operation.

The surfaces in question also remain hot after switching off the unit. These surfaces may only be touched with extreme caution. Wear protective gloves if it is essential to touch hot surfaces.

Make sure that the drained water is not too hot for more intensive contact with skin.

Introduce appropriate equipment to protect components that may become hot against accidental contact.

Hazard due to articles of clothing or other objects being caught

To avoid the dangers presented by the rotating parts of the device:
- → Do not wear loose or frayed clothing or jewellery.
- → Do not dismantle devices for protecting against accidental contact with moving parts (e.g. coupling guard).
- → Only put the device into operation once this protection is in place.
- → The devices for protecting against accidental contact with moving parts may only be removed when the system is at a standstill.

Hazards due to noise

Observe the sound pressure specifications on the motor rating plate. The sound pressure value of the pump is generally about the same value as that of the motor +2 dB(A).

Observe the applicable health and safety regulations. If the device is operated under normal operating conditions, the operator must measure the sound pressure.

Sound pressure levels of 80 dB(A) and above must be noted in the work regulations! The operator must also introduce the following preventative measures:
- → Inform the operating personnel
- → Provide hearing protection

For a sound pressure level of 85 dB(A) and above, the operator must:
- → Make it a mandatory requirement to wear hearing protection
- → Demarcate the noisy areas.
- → Take measures to reduce noise (e.g. insulation, noise barriers)

Leakages

Observe local standards and regulations. Avoid pump leakages to protect persons and the environment against hazardous (explosive, toxic or hot) substances.

Ensure that a dry run of the pump is not possible. A dry run can damage the shaft seal and thereby cause leakages.

2.7 Maintenance tasks

- → Wear the following protective equipment:
  - – Sealed safety goggles
  - – Safety shoes
  - – Safety gloves for protection against cuts
- → Only carry out the maintenance tasks described in these installation and operating instructions.
- → Only original parts from the manufacturer may be used for maintenance and repairs. Use of parts other than original parts releases the manufacturer from any liability.
- → Collect any leakage of fluid and operating fluid immediately and dispose of it according to the locally applicable guidelines.
- → Store tools at the designated locations.
- → After completing work, reattach all safety and monitoring devices and check that they function properly.

2.8 Drive: IEC standard motor

The hydraulics have a standardised connection flange for installing an IEC standard motor. See the technical data for the performance data (e.g. size, construction, hydraulic rated power, speed) needed to select a motor.

2.9 Operator responsibilities

The operator must:
- → Provide the installation and operating instructions in a language which the personnel can understand.
- → Make sure that personnel are suitably trained for the specified work.
- → Ensure that safety and information signs mounted on the device are always legible.
- → Train personnel with regard to the operating principles of the system.
- → Eliminate any risk from electrical current.
- → Equip hazardous components (extremely cold, extremely hot, rotating, etc.) with an on-site guard.
- → Demarcate and cordon off the hazardous area.
- → Define personnel responsibilities to ensure safe working practice.

Children and persons younger than 16 years or with reduced physical, sensory or mental capacities or limited experience are prohibited from handling the device! Persons under the age of 18 must be supervised by a technician.

3 Application/use

3.1 Intended use

The glanded pumps in the Wilo-Atmos GIGA-N series are intended for use as circulators in building services.

The Wilo-Atmos GIGA-N pumps may only be used for:
- → Hot-water heating systems
- → Cooling and cold water circulation systems
- → Drinking water systems (special version)
- → Industrial circulation systems
- → Heat carrier circuits
- → Irrigation

The pumps are only approved for the fluids specified in the “Technical data” section.

3.2 Improper use

WARNING! Misuse of the pump can lead to dangerous situations and damage.
- → Never use with fluids that have not been approved by the manufacturer.
- → Non-permitted substances in the fluid can destroy the pump. Abrasive solids (e.g. sand) increase pump wear.
- → Highly flammable materials/fluids should always be kept at a safe distance from the device.
- → Never allow unauthorised persons to carry out work.
- → Never operate the pump beyond the specified limits of use.
- → Never carry out unauthorised conversions.
- → Use authorised accessories and genuine spare parts only.

Typical installation locations are technical rooms within the building with other domestic installations. No provision has been made for direct installation of the pump in rooms used for other purposes (residential and work rooms).

Outdoor installation requires a corresponding, special version (motor with anti-condensation heater).

Intended use also includes compliance with this manual. Any other use is regarded as non-compliant with the intended use.

4 Product description

4.1 Design

The Wilo-Atmos GIGA-N pump is a single-stage back pull-out-centrifugal pump with spiral housing for horizontal installation. Power and dimensions in accordance with EN 733.

Suitable Wilo control devices (e.g. Comfort control system, CC-HVAC) can control the power of the pumps continuously. This allows optimisation of the pump output for the demands of the installation and particularly economically efficient pump operation.

4.1.1 Hydraulics

The pump consists of a radially divided spiral housing (optionally with replaceable neck rings) and cast-on pump support feet. The impeller is a closed radial impeller. The pump shaft is supported by grease-lubricated radial ball bearings.

4.1.2 Motor

The system is driven by IEC standard motors in a three-phase current version.

NOTICE

Use a heat-resistant mains connecting cable in systems where fluid temperatures exceed 90 °C!

4.1.3 Seal

The fluid pump is sealed via a mechanical seal in accordance with EN 12756.

4.2 Operation with frequency converter

Operation on the frequency converter is permitted. Refer to the documentation from the motor manufacturer for the relevant requirements and observe its contents.

4.3 Technical data

General	
Date of manufacture [MFY]	See rating plate
Mains connection [U/f]	See motor rating plate
Power consumption [P_1]	See motor rating plate
Rated power [P_2]	See motor rating plate
Rated speed [n]	See rating plate
Max. delivery head [H]	See rating plate
Max. volume flow [Q]	See rating plate
Permissible fluid temperature [t]	-20 °C to +140 °C
Permissible ambient temperature [t]	+40 °C
Permissible operating pressure [P_{max}]	16 bar
Flanges	PN 16 in accordance with EN 1092-2
Permissible fluids	– Heating water in accordance with VDI 2035 – Cooling/cold water – Water-glycol mixture up to 40 % vol.
Protection class	IP55
Insulation class [Cl.]	F
Motor protection	See manufacturer's documentation
Special version or with auxiliary equipment (at additional charge)	
Permissible fluids	– Heating water according to VDI 2035 Cooling/ cold water – Water-glycol mixture up to 40 % vol.
Special voltages/frequencies	Pumps with motors with different voltages or other frequencies are available on request
Additional information CH	
Approved fluids for heating pumps	– Heating water (in accordance with VDI 2035/ VdTÜV Tch 1466/CH: in accordance with SWKI BT 102-01) – No oxygen binding agents, no chemical sealant. – Ensure enclosed system from corrosion per-spective. In accordance with VDI 2035 (CH: SWKI BT 102-01); fix leaky spots.

Statement of date of manufacture

The date of manufacture is stated in accordance with ISO 8601: JJJJWww

→ JJJJ = year
→ W = abbreviation for week
→ ww = calendar week

4.4 Type key

Example: Wilo-Atmos GIGA-N 040/200-11/2	
Atmos	Product family
GIGA	Series
N	Construction
040	Nominal diameter DN of pressure port
200	Nominal diameter of the impeller in mm
11	Rated motor power P_2 in kW
2	Number of poles

4.5 Scope of delivery

Complete unit
→ Atmos GIGA-N pump
→ Baseplate
→ Coupling and coupling guard
→ With or without electric motor
→ Installation and operating instructions

Pump by itself:
→ Atmos GIGA-N pump
→ Bearing bracket without baseplate
→ Installation and operating instructions

4.6 Accessories

Accessories have to be ordered separately. For a detailed list, consult the catalogue and spare parts documentation.

4.7 Anticipated noise levels

4.7.1 Pump with three-phase motor, 50 Hz without speed control

Motor power P_N [kW]	Measuring surface sound-pressure level Lp, A [dB(A)] [1]	
	2-pin (2900 rpm)	4-pin (1450 rpm)
0.37	–	45
0.55	58	46
0.75	61	46
1.1	61	51
1.5	64	51
2.2	64	55
3	69	55
4	66	58
5.5	64	58
7.5	72	63
9	72	65
11	72	65
15	72	65
18.5	72	70
22	77	70
30	80	71
37	80	72
45	77	72
55	76	66
75	79	71
90	79	71

Motor power P_N [kW]	Measuring surface sound-pressure level Lp, A [dB(A)] [1]	
	2-pin (2900 rpm)	4-pin (1450 rpm)
110	79	73
132	–	73
160	–	73
200	–	75

[1] Spatial mean value of sound-pressure levels within a cube-shaped measuring area at a distance of 1 m from the surface of the motor

Table 1: Anticipated noise levels for standard pump (50 Hz)

4.7.2 Pump with three-phase motor, 60 Hz without speed control

Motor power P_N [kW]	Measuring surface sound-pressure level Lp, A [dB(A)] [1]	
	2-pin (2900 rpm)	4-pin (1450 rpm)
0.37	–	49
0.55	62	50
0.75	62	53
1.1	64	53
1.5	64	53
2.2	70	56
3	70	58
3.7	73	58
4.5	71	58
5.5	71	60
7.5	74	60
9.2	74	60
11	74	66
15	74	66
18.5	74	66
22	74	66
30	78	68
37	78	68
45	81	69
55	81	70
75	81	75
90	83	75
110	83	75
132	83	77
150	83	77
185	83	80
200	86	80
220	86	80
260	86	80
300	86	80
330	86	80
370	–	80

[1] Spatial mean value of sound-pressure levels within a cube-shaped measuring area at a distance of 1 m from the surface of the motor

Table 2: Anticipated noise levels for standard pump (60 Hz)

4.8 Permissible forces and torques on the pump flanges

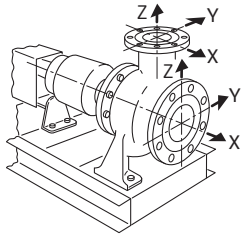

Fig. 1: Permissible forces and torques on the pump flanges – pump made of grey cast iron

DN	Forces F [N]				Torques M [Nm]			
	F_X	F_Y	F_Z	Σ Forces F	M_X	M_Y	M_Z	Σ Torques M
Pressure port								
32	315	298	368	578	385	263	298	560
40	385	350	438	683	455	315	368	665
50	525	473	578	910	490	350	403	718
65	648	595	735	1155	525	385	420	770
80	788	718	875	1383	560	403	455	823
100	1050	945	1173	1838	613	438	508	910
125	1243	1120	1383	2170	735	525	665	1068
150	1575	1418	1750	2748	875	613	718	1278
Suction port								
50	578	525	473	910	490	350	403	718
65	735	648	595	1155	525	385	420	770
80	875	788	718	1383	560	403	455	823
100	1173	1050	945	1838	613	738	508	9100
125	1383	1243	1120	2170	735	525	665	1068
150	1750	1575	1418	2748	875	613	718	1278
200	2345	2100	1890	3658	1138	805	928	1680

Values in acc. with ISO/DIN 5199 – class II (2002) – Appendix B, Family no. 1A.

Table 3: Permissible forces and torques on the pump flanges

If not all working loads reach the maximum permitted values, one of these loads may exceed the normal limit value. This is under the condition that the following additional conditions are fulfilled:

→ All force and torque components are limited to 1.4 times the maximum permitted value.

→ The forces and torques acting on each flange meet the requirements of the compensation equation.

$$\left(\frac{\sum|F|_{\text{effective}}}{\sum|F|_{\text{max. permitted}}}\right)^2 + \left(\frac{\sum|M|_{\text{effective}}}{\sum|M|_{\text{max. permitted}}}\right)^2 \leq 2$$

Fig. 2: Compensation equation

$\Sigma F_{effective}$ and $\Sigma M_{effective}$ are the arithmetic sums of the effective values of both pump flanges (inlet and outlet). $\Sigma F_{max.\ permitted}$ and $\Sigma M_{max.\ permitted}$ are the arithmetic sums of the maximum permitted values of both pump flanges (inlet and outlet). The algebraic signs of Σ F and Σ M are not taken into consideration in the compensation equation.

5 Transportation and storage

5.1 Delivery

The pump is secured to a pallet ex works and is protected against dirt and moisture.

Check the shipment immediately on receipt for defects (damage, completeness). Defects must be noted on the freight documentation. Any defects must be notified to the transport company or the manufacturer immediately on the day of receipt of shipment. Subsequently notified defects can no longer be asserted.

5.2 Transport



DANGER

Risk of fatal injury due to suspended loads!

Never allow anyone to stand under suspended loads! Danger of (serious) injuries caused by falling parts. Loads may not be carried over work places where people are present!

The safety zone must be marked so that there is no danger when the load (or part of it) slips away or if the lifting device snaps or is ripped off.

Loads must never be suspended for longer than necessary.

Accelerations and braking during the lifting operation must be performed in a way that rules out any danger to people.



WARNING

Hand and foot injuries due to lack of protective equipment!

Danger of (serious) injuries during work. Wear the following protective equipment:

- Safety shoes
- Safety gloves for protection against cuts
- Sealed safety goggles
- Safety helmet must be worn if lifting equipment is used!



NOTICE

Use only properly functioning lifting equipment!

Use only properly functioning lifting equipment to lift and lower the pump. Ensure that the pump does not become jammed during lifting and lowering. Do **not** exceed the maximum bearing capacity of the lifting equipment! Check that lifting equipment is functioning properly before use!

CAUTION

Property damage due to incorrect transport

To ensure proper alignment, all equipment is pre-assembled. If dropped or if improperly handled, there is a risk of misalignment or deficient performance due to deformations. The pipes and valves will not withstand loads and should not be used to secure loads in transit.

- Only use permitted lifting gear for transport. Ensure the stability of the load since, with this particular pump design, the centre of gravity is shifted to the top (top-heavy).
- **Never** attach lifting gear to shafts in order to lift the unit.
- Do **not** use the transport lugs on the pump or motor to lift the entire unit. They are only meant for transporting the individual components during installation or dismantling.

Only remove the outer packaging at the place of utilisation to ensure that the pump is not damaged during transport.

CAUTION

Risk of damage due to incorrect packaging.

If the pump is transported again at a later date, it must be packaged so that it cannot be damaged during transport. Use the original packaging for this, or choose equivalent packaging.

5.2.1 Attaching the pump

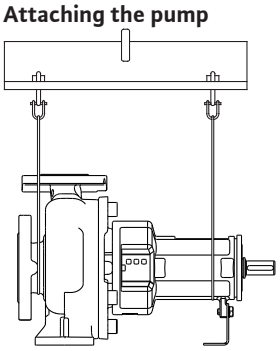

Fig. 3: Attaching the pump

- Comply with applicable national safety regulations.
- Use legally specified and approved lifting gear.
- Select the lifting gear based on the prevailing conditions (weather, attachment point, load, etc.).
- Only attach the lifting gear to the attachment point. Fix in place with a shackle.
- Never feed the lifting gear over or through transport lugs without protection.
- Never feed the lifting gear over sharp edges without protection.
- Use lifting equipment with sufficient bearing capacity.
- The stability of the lifting equipment must be ensured during operation.
- When using lifting equipment, ensure a second person is present to coordinate the procedure if required (e.g. if the operator's field of vision is blocked).
- When lifting, make sure that the load limit of the lifting gear is reduced when pulling at an angle. The safety and efficiency of the lifting gear is best guaranteed when all load-bearing elements are loaded vertically. If necessary, use a lifting arm, to which the lifting gear can be vertically attached.
- **Ensure the load is lifted vertically!**
- **Prevent the suspended load from swinging!**

5.2.2 Attaching the unit

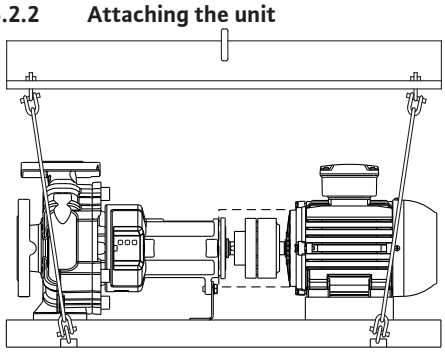

Fig. 4: Attaching the unit

- Comply with applicable national safety regulations.
- Use legally specified and approved lifting gear.
- Select the lifting gear based on the prevailing conditions (weather, attachment point, load, etc.).
- Only attach the lifting gear to the attachment point. Fix in place with a shackle.
- Never feed the lifting gear over or through transport lugs without protection.
- Never feed the lifting gear over sharp edges without protection.
- Use lifting equipment with sufficient bearing capacity.
- The stability of the lifting equipment must be ensured during operation.
- When using lifting equipment, ensure a second person is present to coordinate the procedure if required (e.g. if the operator's field of vision is blocked).
- When lifting, make sure that the load limit of the lifting gear is reduced when pulling at an angle. The safety and efficiency of the lifting gear is best guaranteed when all load-bearing elements are loaded vertically. If necessary, use a lifting arm, to which the lifting gear can be vertically attached.
- **Ensure the load is lifted vertically!**
- **Prevent the suspended load from swinging!**

5.3 Storage

NOTICE

Improper storage can lead to damage to the equipment.

Damage caused by improper storage is not covered by the guarantee or warranty.

- Requirements at the storage location:
  - dry
  - clean
  - well-ventilated
  - free from vibrations
  - free from humidity
  - free from rapid or extreme changes in temperature
- Store the product somewhere safe against mechanical damage.
- Protect the bearings and couplings from sand, gravel and other foreign objects.
- Lubricate the unit to prevent rust and bearing seizing.
- Manually rotate the drive shaft several times once a week.

Storage for more than three months

Additional precautionary measures:

- All rotating parts must be coated with a suitable protective medium to protect them from rust.
- If the pump is to be stored for more than a year, consult the manufacturer.

6 Installation and electrical connection

6.1 Personnel qualifications

→ Electrical work: A qualified electrician must carry out the electrical work.

6.2 Operator responsibilities

→ Observe locally applicable accident prevention and safety regulations of professional and trade associations.
→ Observe all regulations for working with heavy loads and under suspended loads.
→ Provide protective equipment and ensure that the protective equipment is worn by personnel.
→ Avoid pressure surges!
Pressure surges can occur in long pressure pipes. These pressure surges can lead to the destruction of the pump!
→ Structural components and foundations must be of sufficient stability in order to allow the device to be fixed in a secure and functional manner. The operator is responsible for the provision and suitability of the building/foundation!
→ Check that the available consulting documents (installation plans, design of the operating space, inflow conditions) are complete and correct.

6.3 Preparing the installation



WARNING

Risk of personal injury and property damage due to improper handling!

- Never set up the pump unit on unfortified surfaces or surfaces that cannot bear loads.
- The pump should only be installed after completion of all welding and soldering work.
- Flush the pipe system if required. Dirt can cause the pump to fail.

→ The pumps (in the standard version) must be protected from the weather and installed in a frost/dust-free, well-ventilated environment that is not potentially explosive.
→ Mount the pump in a readily accessible place. This makes it easier to complete inspections, maintenance (e.g. mechanical seal change) or replacement in the future.
→ A travelling crane or a device for attaching hoisting gear should be installed above the set-up site of large pumps.

6.4 Setting up the pump by itself (variant B, Wilo variant key)

When installing a pump by itself, the required coupling guard and baseplate of the pump manufacturer should be used. In any case, all components must meet the CE regulations. The coupling guard must be compatible with EN 953.

6.4.1 Selecting the motor

Select a motor with sufficient power.

Shaft power	< 4 kW	4 kW < P_2 < 10 kW	10 kW < P_2 < 40 kW	40 kW < P_2
Limit value P_2 for the motor	25 %	20 %	15 %	10 %

Table 4: Motor/shaft power

Example:
→ Duty point water: Q = 100 m3/h; H = 35 m
→ Efficiency: 78 %
→ Hydraulic power: 12.5 kW
→ Plank the base and baseplate.

The required limit value for this duty point lies at 12.5 kW x 1.15 = 14.3 kW. A motor with a power of 15 kW would be the correct choice.

Wilo recommends using a B3 motor (IM1001) with base installation, which is compatible with IEC34-1.

6.4.2 Selecting the coupling

→ To establish the connection between the pump with bearing bracket and motor, use a flexible coupling.
→ Select the coupling size according to the recommendations of the coupling manufacturer.

→ Follow the instructions of the coupling manufacturer.
→ After installation on the base and connecting the pipes, check the coupling alignment and correct it if necessary. The procedure is described in the chapter “Coupling alignment”.
→ After reaching the operating temperature, the coupling alignment must be checked again.
→ Avoid accidental contact during operation. The coupling must be protected in accordance with EN 953.

6.5 Installing the pump unit on a base

CAUTION

Danger of property and material damage!

A missing foundation or incorrect installation of the unit on the base can lead to a malfunction of the pump. Incorrect installation is not covered by the warranty.

- Only have the pump unit installed by qualified personnel.
- A professional from the concrete sector must be hired for all base work.

6.5.1 Base

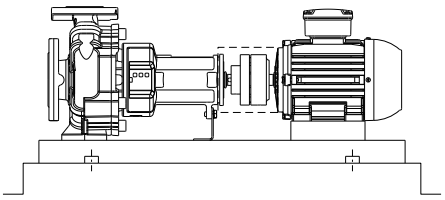

Fig. 5: Installing the unit on a base

The base must be able to support the unit installed on the baseplate indefinitely. The base must be level to ensure there is no tension on the baseplate or unit. Wilo recommends using premium, non-shrink concrete of an adequate thickness for manufacturing. This would prevent vibrations from being transmitted.

The base must be able to accommodate the forces, vibrations and impact that occur.

Guidance values for dimensioning the base:
→ Approx. 1.5 to 2 x heavier than the unit.
→ The width and length should each be about 200 mm greater than the baseplate.

The baseplate must not be strained or pulled down on the surface of the base. It must be supported so that the original alignment is not changed.

Prepare drilled holes for the anchor bolts. Position pipe sleeves vertically in the base at the corresponding points. Diameter of the pipe sleeves: Around 2½ x the diameter of the screws. This allows the screws to be moved in order to achieve their final positions.

Wilo recommends initially pouring the base up to about 25 mm below the planned height. The surface of the concrete base must be well contoured before curing. Remove the pipe sleeves after the concrete cures.

When the baseplate is poured out, insert steel rods vertically into the base at regular intervals. The required number of steel rods is dependent on the size of the baseplate. The rods must project into the baseplate by up to 2/3.

6.5.2 Preparing the baseplate for anchoring

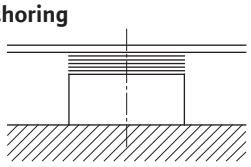

Fig. 6: Shims on the base surface

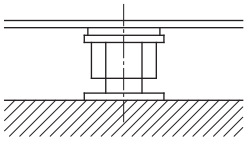

Fig. 7: Levelling screws on the base surface

→ Thoroughly clean the base surface.
→ Place shims (approx. 20 – 25 mm thick) on every screw hole on the base surface. Alternatively, levelling screws can also be used.
→ For a length spacing of the fixation bores ≥ 800 mm, shims should be additionally placed in the middle of the baseplate.
→ Apply the baseplate and level in both directions with additional shims.
→ Align the unit when installing on the base using a spirit level (at the shaft/pressure port).
The baseplate must be horizontal; tolerance: 0.5 mm per metre.
→ Fit anchor bolts in the provided drilled holes.

NOTICE

The anchor bolts must fit in the fastening bores of the baseplate.

They must meet the relevant standards and be sufficiently long, so that a firm fit in the base is guaranteed.

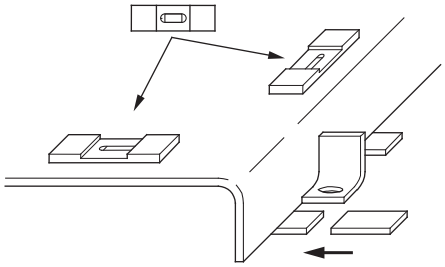

Fig. 8: Levelling and aligning the baseplate

- → Pour in anchor bolts with concrete. After the concrete has set, tighten the anchor bolts evenly and firmly.
- → Align the unit so that the pipes can be connected to the pump stress-free.

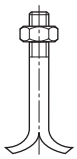

Fig. 9: Anchor bolt

6.5.3 Pouring out the baseplate

The baseplate can be poured out after fixing. The process of pouring out reduces vibrations to a minimum.

- → Wet the base surface before pouring out the concrete.
- → Use a suitable, non-shrink mortar for pouring out.
- → Pour the mortar through the openings in the baseplate. Be sure to avoid hollow spaces.
- → Plank the base and baseplate.
- → After curing, check the anchor bolts for a tight fit.
- → Coat the unprotected surfaces of the base to protect from moisture.

6.6 Pipework

The pipe connections of the pump are fitted with dust caps so that no foreign objects can penetrate during transport and installation.

- → These caps must be removed before connecting pipes.

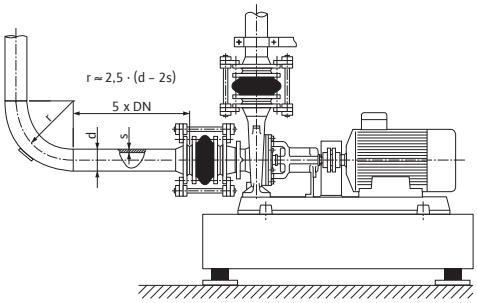

Fig. 10: Connecting the pump without tension, settling section upstream and downstream of the pump

CAUTION

Improper pipework/installation can lead to property damage! Welding beads, cinder and other contaminants can damage the pump!

- The pipes must be sufficiently dimensioned, taking the pump inlet pressure into account.
- Connect the pump and pipes using suitable gaskets. Take the pressure, temperature and fluid into account. Check the gaskets for proper fitting.
- The pipes must not transfer any forces to the pump. Brace the pipes directly before the pump and connect them without tension.
- Observe the permissible forces and torques on the pump connecting pieces!
- The expansion of the pipes in the event of a temperature rise is to be compensated by suitable means.
- Avoid air pockets in piping by means of appropriate installations.

NOTICE

Simplify subsequent work on the unit!

- To ensure the entire unit does not have to be emptied, install a non-return valve and shut-off devices before and after the pump.

NOTICE

Avoid flow cavitation!

- A settling section must be provided upstream and downstream of the pump in the form of a straight pipe. The length of the settling section must be at least 5 times the nominal diameter of the pump flange.

→ The pipes and pump must be free of mechanical stress when installed.
→ The pipes must be fixed in such a way that the pump does not have to support the weight of the pipes.
→ Clean, flush and purge the unit before connecting the pipes.
→ Remove the covers from the suction and discharge ports.
→ If required, install a dirt filter upstream of the pump in the pipe on the suction side.
→ Then connect the pipes to the pump connecting pieces.

6.7 Aligning the unit

CAUTION

Incorrect alignment can result in property damage!

The transport and installation of the pump can affect the alignment. The motor must be aligned to the pump (not vice versa).

- Check the alignment before the first start.

CAUTION

Changes to the alignment during operation can result in property damage.

The pump and motor are usually aligned at ambient temperature. Thermal expansion at operating temperature can change the alignment, particularly in the case of very hot fluids.
Adjustment may be required if the pump is required to pump very hot fluids:

- Allow the pump to run at the actual operating temperature.
- Switch off the pump then immediately check the alignment.

Precondition for reliable, smooth and efficient operation of a pump unit is proper alignment of the pump and the drive shaft.

Misalignments can be the cause of:
→ excessive noise development during pump operation
→ vibrations
→ premature wear
→ excessive coupling wear

6.7.1 Coupling alignment

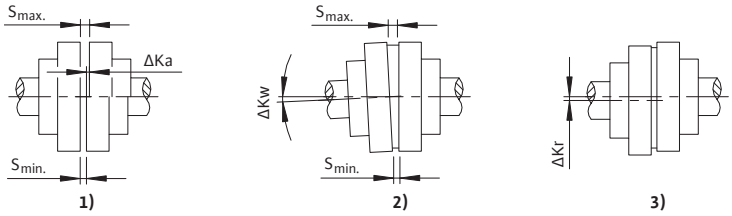

Fig. 11: Coupling alignment without spacer

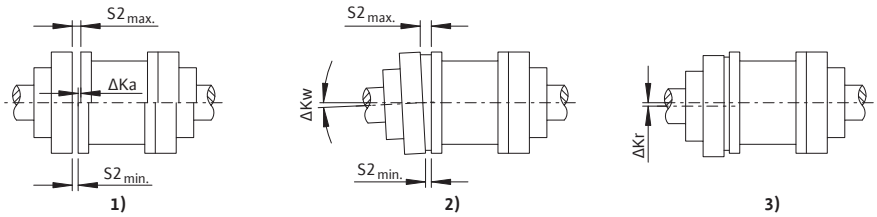

Fig. 12: Coupling alignment with spacer

1. Axial displacement (ΔKa)

→ Adjust the gap ΔKa within the permissible range of deviation.
Permissible deviations for dimensions S and S2, see table “Permissible gaps S and S2”

2. Angular displacement (ΔKw)

The angular displacement ΔKw can be measured as the difference between the gaps:
$\Delta S = S_{max.} - S_{min.}$ and/or $\Delta S2 = S2_{max.} - S2_{min.}$

The following condition must be met:
ΔS and/or $\Delta S2 \leq \Delta S_{perm.}$ (perm. = permissible; $\Delta S_{perm.}$ is dependent on the speed)

If required, the permissible angular displacement ΔKw can be calculated as follows:
$\Delta KW_{perm.}$ in RAD = $\Delta S_{perm.}$ /DA
$\Delta KW_{perm.}$ in GRD = ($\Delta S_{perm.}$ /DA) x (180/π)
(with $\Delta S_{perm.}$ in mm, DA in mm)

3. Radial displacement (ΔKr)

The permissible radial displacement $\Delta Kr_{perm.}$ can be taken from the table “Maximum permissible shaft displacement”. Radial displacement is dependent on the speed. The numerical values in the table and their interim values can be calculated as follows:
$\Delta Kr_{perm.} = \Delta S_{perm.} = (0.1+DA/1000) \times 40/\sqrt{n}$
(with speed n in rpm, DA in mm, radial displacement $\Delta Kr_{perm.}$ in mm)

Coupling size	DA [mm]	S [mm]	S2 [mm]
68	68	2 … 4	5
80	80	2 … 4	5
95	95	2 … 4	5
110	110	2 … 4	5
125	125	2 … 4	5
140	140	2 … 4	5
160	160	2 … 6	6
180	180	2 … 6	6
200	200	2 … 6	6

(“S” for couplings with a spacer and “S2” for couplings with a spacer)

Table 5: Permissible gaps S and S2

Coupling size	$\Delta S_{perm.}$ and $\Delta Kr_{perm.}$ [mm]; speed dependent			
	1500 rpm	1800 rpm	3000 rpm	3600 rpm
68	0.20	0.20	0.15	0.15

Coupling size	$\Delta S_{perm.}$ and $\Delta Kr_{perm.}$ [mm]; speed dependent			
	1500 rpm	1800 rpm	3000 rpm	3600 rpm
80	0.20	0.20	0.15	0.15
95	0.20	0.20	0.15	0.15
110	0.20	0.20	0.15	0.15
125	0.25	0.20	0.15	0.15
140	0.25	0.25	0.20	0.15
160	0.30	0.25	0.20	0.20
180	0.30	0.25	0.20	0.20
200	0.30	0.30	0.20	0.20

Permissible shaft displacement $\Delta S_{perm.}$ and $\Delta Kr_{perm.}$ in mm (during operation, rounded)

Table 6: Maximum permissible shaft displacement $\Delta S_{perm.}$ and $\Delta Kr_{perm.}$

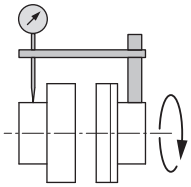

Fig. 13: Checking the radial alignment with a comparator

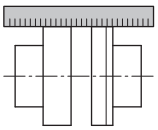

Fig. 14: Checking the radial alignment with a ruler

Checking the radial alignment

- → Firmly clamp a dial gauge to one of the couplings or to the shaft. The piston of the dial gauge must lie against the crown of the other half-coupling.
- → Set the dial gauge to zero.
- → Turn the coupling and write down the measuring result after every quarter turn.
- → Alternatively, the radial coupling alignment can also be checked with a ruler.

NOTICE

The radial deviation of the two coupling halves must not exceed the maximum values found in table “Maximum permissible shaft displacement $\Delta S_{perm.}$ and $\Delta Kr_{perm.}$”. This requirement applies to every operating status – including operating temperature and inlet pressure.

Checking the axial alignment

NOTICE

The axial deviation of the two coupling halves must not exceed the maximum values found in table “Permissible gaps S and S2”. This requirement applies to every operating status – including operating temperature and inlet pressure.

Using a calliper gauge, circumferentially check the distance between the two coupling halves.

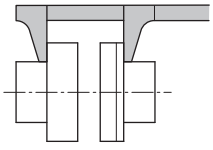

Fig. 15: Checking the axial alignment with a calliper gauge

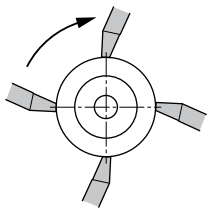

Fig. 16: Checking the axial alignment with a calliper gauge – circumferential check

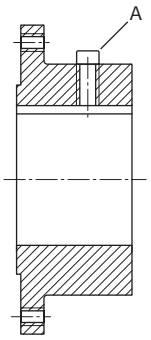

Fig. 17: Adjusting screw A for axial safeguard

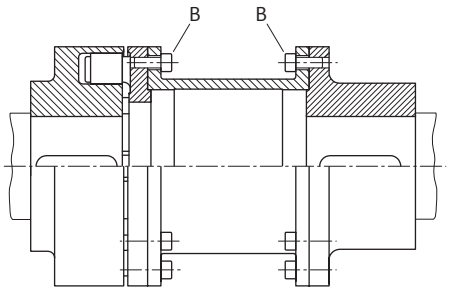

Fig. 18: Fastening screws B of coupling halves

6.7.2 Alignment of the pump unit

→ Connect the coupling halves once correctly aligned.
The tightening torques for the coupling are listed in the table “Tightening torques for adjusting screws and coupling halves”.
→ Install the coupling guard.

Coupling parameter d [mm]	Tightening torque for adjusting screw A [Nm]	Tightening torque for adjusting screw B [Nm]
80, 88, 95, 103	4	13
110, 118	4	14
125, 135	8	17.5
140, 152	8	29
160, 172	15	35
180, 194	25	44
200, 218	25	67.5
225, 245	25	86
250, 272	70	145
280, 305	70	185
315, 340	70	200
350, 380	130	260
400, 430	130	340
440, 472	230	410

Table 7: Tightening torques for adjusting screws and coupling halves

Any deviations in the measuring results indicate a misalignment. In this case, the unit must be realigned to the motor.
→ Loosen the hexagon head screws and the counter nuts on the motor.
→ Place shims under the motor feet until the height difference is compensated.
→ Pay attention to the axial alignment of the coupling.
→ Tighten the hexagon head screws again.

→ Finally, check the function of the coupling and shaft. The coupling and shaft must be easy to turn by hand.
→ After correct alignment, mount the coupling guard.

The tightening torques for the pump and motor on the baseplate are listed in the table “Tightening torques for pump and motor”.

Screw:	M6	M8	M10	M12	M16	M20	M24
Tightening torque [Nm]	10	25	35	60	100	170	350

Table 8: Tightening torques for pump and motor

6.8 Electrical connection



DANGER

Risk of fatal injury due to electrical current!

Improper conduct when carrying out electrical work can lead to death due to electric shock!

- Only use an electrical installer approved by the local electricity supplier to make the connection.
- Observe the locally applicable regulations.
- Before beginning work on the product, make sure that the pump and drive are electrically isolated.
- Make sure that no one can turn on the power supply again before work is completed.
- Make sure that all energy sources can be isolated and locked. If the pump was switched off by a protective device, it must be secured against switching back on again until the error has been remedied.
- Electrical machines must always be earthed. Earthing must be appropriate for the motor and meet the relevant standards and regulations. Earth terminals and fixation elements must be dimensioned appropriately.
- Connection cables must **never** touch the piping, pump or motor housing.
- If it is possible for persons to come into contact with the pump or the pumped fluid, the earthed connection must also be fitted with a residual current circuit breaker.
- Observe the manufacturer's installation and operating instructions for the motor and accessories!
- During installation and connection work, observe the circuit diagram in the terminal box!

CAUTION

Risk of property damage caused by improper electrical connection!

An inadequate mains design can lead to system failures and cable fires due to mains overload! If the wrong voltage is applied, the pump can be damaged!

- Ensure that the current type and voltage of the mains connection correspond to the specifications on the motor rating plate.



NOTICE

Three-phase motors are equipped with a thermistor depending on the manufacturer.

- Observe the wiring information in the terminal box.
- Observe the documentation from the manufacturer.

→ Establish an electrical connection via a stationary mains connection cable.
→ In order to ensure drip protection and strain relief on the cable connections, only cables with a suitable outer diameter may be used and the cable feedthroughs must be firmly screwed.
Cables must be bent off to form outlet loops near screwed connections to avoid the accumulation of drip water.
→ Unused cable feedthroughs should be sealed with the sealing plates provided, and screwed tight.
→ Reinstall any uninstalled safety devices, such as terminal box covers!
→ **Check the direction of rotation of the motor while commissioning!**

6.8.1 Fuse on mains side

Circuit breaker

The size and switching characteristics of the circuit breakers must conform to the rated current of the connected product. Observe local regulations.

Residual-current device (RCD)

Comply with the regulations of the local energy supply company! The use of a residual-current device is recommended.
If persons come into contact with the device and conductive fluids, secure the connection **with** a residual-current device (RCD).

6.8.2 Protective devices



WARNING

Risk of burns from hot surfaces!

The spiral housing and the discharge cover assume the temperature of the fluid during operation. It may cause burns.

- Depending on the application, insulate the spiral housing.
- Provide corresponding guards.
- **Allow the pump to cool down at ambient temperature after switching it off!**
- Observe local regulations.

CAUTION

Risk of property damage due to incorrect insulation!

The discharge cover and the bearing bracket must not be insulated.

7 Commissioning



WARNING

Risk of injury due to missing protective equipment!

(Serious) injuries can occur due to missing protective equipment.

- Do not remove the unit casings of moving parts (such as that of the coupling) during machine operation.
- Always wear protective clothing, protective gloves and protective goggles when working.
- Do not remove or disable the safety devices on the pump and motor.
- An authorised technician must check the functionality of the safety devices on the pump and motor prior to commissioning.

CAUTION

Risk of property damage due to improper operation!

Operating outside of the duty point can impair the pump efficiency or damage the pump. Operating with the shut-off device closed for more than 5 minutes is not recommended and generally dangerous in the case of hot fluids.

- The pump must not be operated outside of the specified operating range.
- Do not operate the pump with the shut-off devices closed.
- Make sure that the NPSH-A value is always higher than the NPSH-R value.

CAUTION

Risk of property damage due to condensation formation!

When using the pump in air-conditioning or cooling applications, condensate can form, which could damage the motor.

- Open the condensate drainage holes in the motor housing at regular intervals and drain the condensate.

7.1 Personnel qualifications

→ Electrical work: A qualified electrician must carry out the electrical work.
→ Operation/control: Operating personnel must be instructed in the functioning of the complete system.

7.2 Filling and venting

NOTICE

The standard version of the Atmos GIGA-N pump has **no** air vent valve. The suction line and pump are vented via a suitable venting device on the pressure flange of the pump. An optional air vent valve is available.

WARNING

Risk of personal injury and property damage due to extremely hot or extremely cold pressurised fluid!

Depending on the temperature of the fluid, when the venting screw is opened completely, extremely hot or extremely cold fluid in liquid or vapour form may escape or shoot out at high pressure. Fluid may shoot out at high pressure depending on the system pressure.

- Make sure the venting screw is in a suitable, secure position.
- Always exercise caution when opening the venting screw.

Procedure for venting systems where the fluid level lies above the suction port of the pump:

→ Open the shut-off device on the pressure side of the pump.
→ Slowly open the shut-off device on the suction side of the pump.
→ To vent, open the venting screw on the pressure side of the pump or on the pump.
→ Close the venting screw as soon as fluid escapes.

Procedure for filling/venting systems with a non-return valve, where the fluid level lies below the suction port of the pump:

→ Close the shut-off device on the pressure side of the pump.
→ Open the shut-off device on the suction side of the pump.
→ Fill fluid in via a funnel until the suction line and the pump are completely filled.

7.3 Checking the direction of rotation

CAUTION

Risk of property damage!

Danger of damage to the pump parts that rely on the fluid supply for lubrication.

- Before checking the direction of rotation and commissioning, the pump must be filled with fluid and vented.
- Do not operate the pump with the shut-off devices closed.

The correct direction of rotation is indicated by an arrow on the pump housing. As seen from the motor side, the pump rotates correctly in the clockwise direction.

→ Remove coupling guard.
→ To check the direction of rotation, disengage the pump from the coupling.
→ Switch the motor on **briefly**. The direction of rotation of the motor must correspond to the direction of rotation arrow on the pump.

→ If the direction of rotation is wrong, change the electrical connection of the motor.
→ Connect the pump to the motor after ensuring the correct direction of rotation.
→ Check the alignment of the coupling and realign it if required.
→ Reinstall the coupling guard.

7.4 Switching on the pump

CAUTION

Risk of property damage!

- Do not operate the pump with the shut-off devices closed.
- Only operate the pump within the permissible operating range.

Once all preparatory work has been properly completed and all necessary precautionary measures have been taken, the pump is ready to start.

Before starting up the pump, check whether:
→ Filling and ventilation lines are closed.
→ The bearings are filled with the right amount of lubricant of the right type (if applicable).
→ The motor is turning in the right direction.
→ The coupling guard is attached correctly and is screwed tightly.
→ Pressure gauges with a suitable measurement range are installed on the suction and pressure side of the pump. Do not install the pressure gauges on the bends in the piping. The kinetic energy of the fluid can affect the measured values at these points.
→ All blind flanges are removed.
→ The shut-off device on the suction side of the pump is completely opened.
→ The shut-off device in the pressure pipe of the pump is completely closed or only slightly opened.



WARNING

Risk of injury due to high system pressure!

The power and status of the installed centrifugal pumps must be constantly monitored.

- Do **not** connect pressure gauges to a pressurised pump.
- Install pressure gauges on the suction and pressure side.



NOTICE

It is recommended to attach a flow meter to determine the exact pump delivery rate.

CAUTION

Risk of property damage due to motor overload!

- To start up the pump, use the soft start, star-delta connection or speed control.

→ Switch on the pump.
→ After reaching the speed, slowly open the shut-off device in the pressure pipe and regulate the pump to the duty point.
→ While the pump is starting, vent completely via the venting screw.

CAUTION

Risk of property damage!

If abnormal noises, vibrations, temperatures or leaks occur when starting up:

- Switch the pump off immediately and remedy the cause.

7.5 Switching frequency

CAUTION

Risk of property damage!

The pump or motors may be damaged by incorrect switching.

- Only switch on the pump again when the motor is at a complete standstill.

A maximum of 6 connections per hour are permitted in accordance with IEC 60034-1. It is recommended that repeated activations occur at regular intervals.

8 Shutdown

8.1 Switching off the pump and temporary shutdown

CAUTION

Risk of property damage due to overheating!

Hot fluids can damage the pump seals when the pump is at a standstill.

After deactivating the heat source:

- Allow the pump to run until the fluid temperature has dropped to an appropriate level.

CAUTION

Risk of property damage due to frost!

If there is a danger of frost:

- Drain the pump completely to avoid damage.

→ **Close** the shut-off device in the pressure pipe. If a non-return valve is installed in the pressure pipe, and there is counter pressure, the shut-off device can remain open.
→ Do **not** close the shut-off device in the suction line.
→ Switch off the motor.
→ If there is no danger of frost, make sure the fluid level is sufficient.
→ Operate the pump every month for 5 minutes. Doing this prevents deposits from occurring in the pump compartment.

8.2 Shutdown and storage



WARNING

Risk of injury and damage to property!

- Dispose off the pump contents and rinsing fluid by taking the legal regulations into account.
- Always wear protective clothing, protective gloves and protective goggles when working.

→ Clean the pump thoroughly prior to storage!
→ Drain the pump completely and rinse thoroughly.
→ The remaining fluid and rinsing fluid should be drained, collected and disposed off via the drain plug. Observe local regulations along with the notes under “Disposal”!
→ Spray the interior of the pump with a preservative through the suction and discharge ports.
→ Close the suction and discharge ports with caps.
→ Grease or oil the blank components. For this, use silicone-free grease or oil. Observe the manufacturer’s instructions for preservatives.

9 Maintenance/repair

It is recommended to have the pump serviced and checked by the Wilo customer service.

Maintenance and repair work require the pump be partially or completely dismantled. The pump housing can be installed in the piping.



DANGER

Risk of fatal injury due to electrical current!

Improper conduct when carrying out electrical work can lead to death due to electric shock!

- Any work on electrical devices may only be carried out by a qualified electrician.
- Before all work on the unit, deactivate the power supply and guard against accidental switch-on.
- Any damage to the pump connection cable should only ever be rectified by a qualified electrician.
- Observe the installation and operating instructions for the pump, motor and other accessories.
- Reinstall any uninstalled safety devices, such as terminal box covers, once the work is complete.



WARNING

Sharp edges on the impeller!

Sharp edges can form on the impeller. There is danger of limbs being severed! Protective gloves must be worn to protect against cuts.

9.1 Personnel qualifications

→ Electrical work: A qualified electrician must carry out the electrical work.
→ Maintenance tasks: The technician must be familiar with the use of operating fluids and their disposal. In addition, the technician must have basic knowledge of mechanical engineering.

9.2 Operation monitoring

CAUTION

Risk of property damage!

Improper operation can damage the pump or motor. Operating with the shut-off device closed for more than 5 minutes is not recommended and generally dangerous in the case of hot fluids.

- Never allow the pump to run without fluid.
- Do not operate the pump with the shut-off device in the suction line closed.
- Do not operate the pump for a longer period of time with the shut-off device in the pressure pipe closed. This can cause the fluid to overheat.

The pump must run quietly and vibration-free at all times.

The rolling bearings must run quietly and vibration-free at all times.

Increased current consumption with unchanged operating conditions is a sign of bearing damage. The bearing temperature may be up to 50°C above the ambient temperature, but never rise above 80°C.

→ Check the static gaskets and the shaft seal regularly for leakages.
→ For pumps with mechanical seals, there is little to no visible leakage during operation. If a gasket is leaking significantly, this is a sign that the gasket surfaces are worn. The gasket must be replaced. The service life of a mechanical seal greatly depends on the operating conditions (temperature, pressure, fluid properties).
→ Wilo recommends checking the flexible coupling elements regularly and replacing them at the first sign of wear.
→ Wilo recommends briefly putting the standby pumps into operation at least once a week to ensure they are always ready for operation.

9.3 Maintenance tasks

The bearing bracket of the pump is equipped with rolling bearings that have lifetime lubrication.

→ The rolling bearings of the motors are to be maintained according to the installation and operating instructions of the motor manufacturer.

9.4 Draining and cleaning



WARNING

Risk of injury and damage to property!

- Dispose off the pump contents and rinsing fluid by taking the legal regulations into account.
- Always wear protective clothing, protective gloves and protective goggles when working.

9.5 Dismantling



DANGER

Risk of fatal injury due to electrical current!

Improper conduct when carrying out electrical work can lead to death due to electric shock!

- Any work on electrical devices may only be carried out by a qualified electrician.
- Before all work on the unit, deactivate the power supply and guard against accidental switch-on.
- Any damage to the pump connection cable should only ever be rectified by a qualified electrician.
- Observe the installation and operating instructions for the pump, motor and other accessories.
- Reinstall any uninstalled safety devices, such as terminal box covers, once the work is complete.

Maintenance and repair work require the pump be partially or completely dismantled. The pump housing can be installed in the piping.

→ Switch off the energy supply to the pump and secure against switching on again.
→ Close all valves in the suction line and pressure pipe.
→ Drain the pump by opening the drainage screw and the venting screw.
→ Remove coupling guard.
→ If present: Remove the intermediate sleeve of the coupling.
→ Remove the fastening screws of the motor from the baseplate.



NOTICE

Observe the section drawing in the chapter “Spare parts”.

9.5.1 Dismantling the slide-in unit

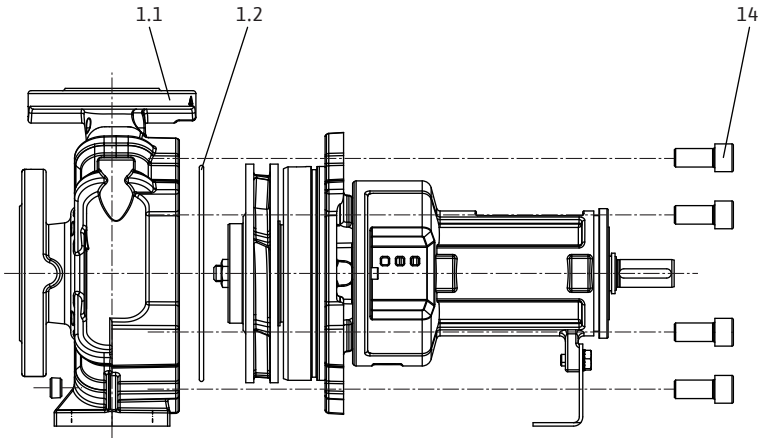

Fig. 19: Removing the slide-in unit

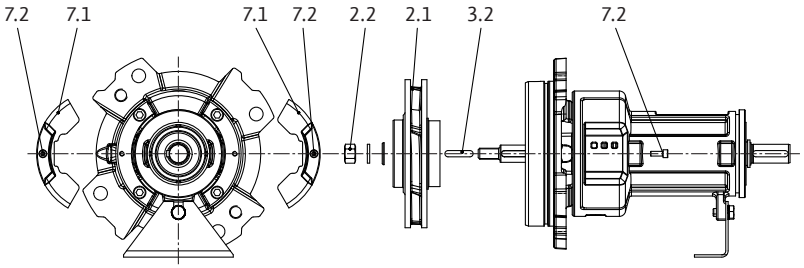

Fig. 20: Dismantling the slide-in unit

1. Mark positions of the parts that belong together with a coloured pen or scriber.
2. Remove the hexagon head screws (14).
3. Carefully pull the slide-in unit straight out of the spiral housing (1.1) to avoid damage to interior parts.
4. Put the slide-in unit down at a safe workplace. To continue dismantling the slide-in unit, fix it **vertically** in position with the drive shaft facing downward. The kit must be removed vertically to avoid damage to the impellers, neck rings and other parts.
5. Remove the housing seal (1.2).
6. Remove the hexagon head screws (7.2) and remove the protective grid (7.1).
7. Loosen the impeller nut (2.2) and remove along with the lock washer and impeller disc.

Version with mechanical seal (optional: mechanical seal on the sleeve)

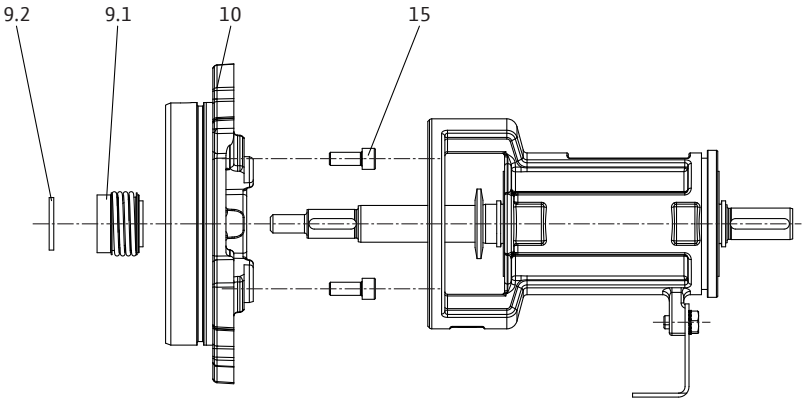

Fig. 21: Version with mechanical seal

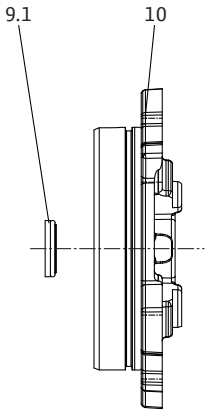

Fig. 22: Housing cover, mechanical seal

1. Remove the spacer (9.2).
2. Remove the rotating part of the mechanical seal (9.1).
3. Loosen the interior hexagonal head screws (15) and remove the housing cover (10).
4. Remove the stationary part of the mechanical seal (9.1).

9.5.2 Dismantling the bearing bracket

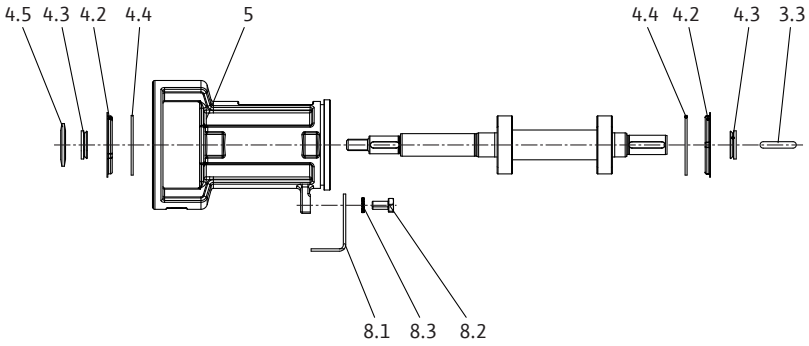

Fig. 23: Bearing bracket

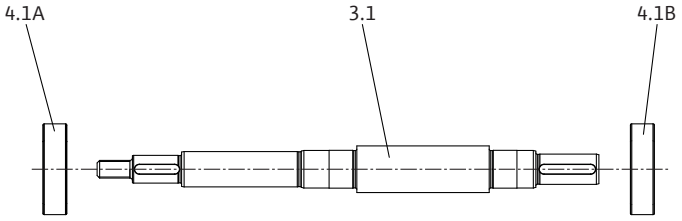

Fig. 24: Shaft

1. Remove the key (3.3).
2. Pull off the thrower (4.5) and V-gaskets (4.3).
3. Remove the bearing cover (4.2) and retaining ring (4.4).
4. Loosen the hexagon head screw (8.2), remove the lock washer (8.3) and remove the pump support foot (8.1).
5. Completely remove the shaft (3.1) from the bearing bracket (5).
6. Remove the ball bearings (4.1A and 4.1B) from the shaft (3.1).

Neck rings

The pump is optionally equipped with exchangeable neck rings. During operation, the gap backlash increases due to wear. The period of use of the rings depends on the operating conditions. If the volume flow decreases and the motor shows signs of increased current consumption, this could be caused by an impermissibly high gap backlash. In this case, replace the neck rings.

9.6 Installation

Installation must be carried out according to the detailed drawings in the “Dismantling” chapter and the general drawings in the “Spare parts” chapter.

- → Clean the single components and check them for wear before installing them. Damaged or worn parts must be replaced with original spare parts.
- → Coat location points with graphite or similar materials before installation.
- → Check the O-rings for damage and replace if necessary.
- → Flat gaskets must be constantly replaced.

DANGER

Risk of fatal injury due to electrical current!

Proceeding incorrectly when carrying out electrical work can lead to death by electric shock!

- Any work on electrical devices may only be carried out by a qualified electrician.
- Before all work on the unit, deactivate the power supply and secure it against being accidentally switched on again.
- Any damage to the pump connection cable should only ever be repaired by a qualified electrician.
- Observe the installation and operating instructions for the pump, motor and other accessories!
- Reinstall any uninstalled safety devices, such as terminal box covers, once the work is complete!

NOTICE

Take note of the drawings in the “Spare parts” chapter.

9.6.1 Installing the shaft/bearing bracket

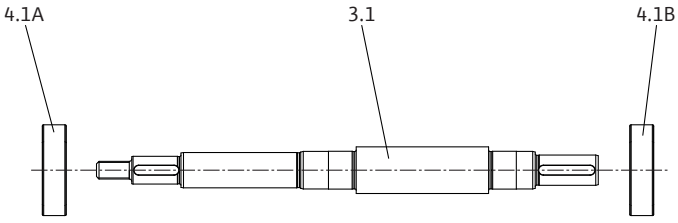

Fig. 25: Shaft

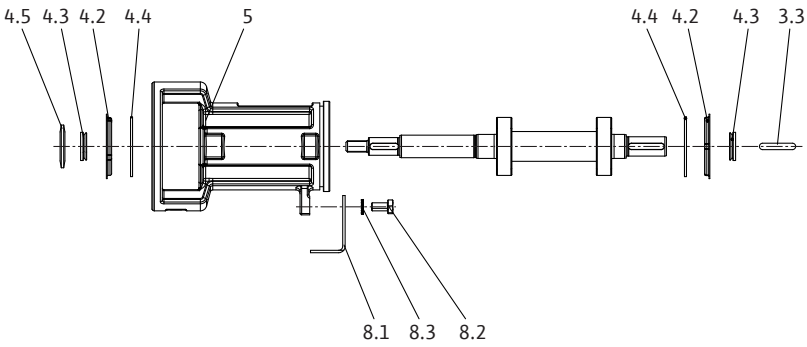

Fig. 26: Bearing bracket

1. Press the ball bearings (4.1A and 4.1B) onto the shaft (3.1).
2. Push the shaft (3.1) into the bearing bracket (5).
3. Insert the retaining rings (4.4) into the groove and the bearing cover (4.2) into the drilled hole of the bearing bracket (5).
4. Push the V-gaskets (4.3) and thrower (4.2) onto the shaft (3.1).
5. Insert the key (3.3) into the shaft nut.
6. Fasten the pump support foot (8.1) with the hexagon head screw (8.2) and lock washer (8.3).

Neck rings

The pump is optionally equipped with exchangeable neck rings. During operation, the gap backlash increases due to wear. The period of use of the rings depends on the operating conditions. If the volume flow decreases and the motor shows signs of increased current consumption, this could be caused by an impermissibly high gap backlash. In this case, replace the neck rings.

9.6.2 Assembling the slide-in unit

Version with mechanical seal (optional: mechanical seal on the sleeve)

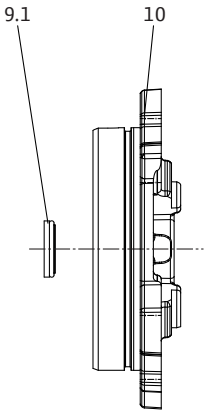

Fig. 27: Housing cover, mechanical seal

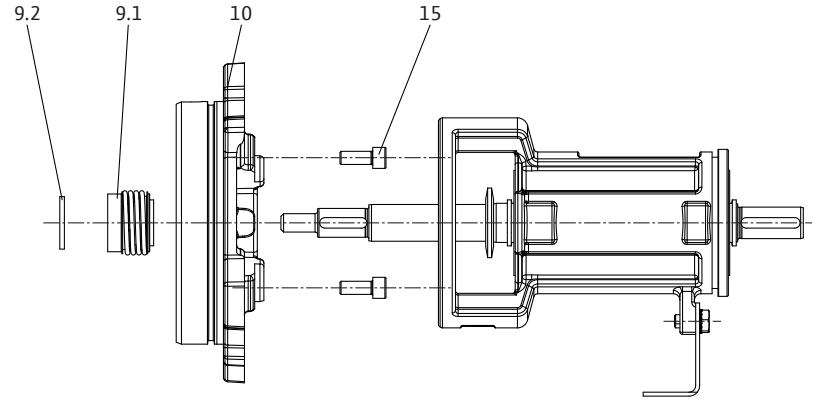

Fig. 28: Version with mechanical seal

1. Clean the stationary ring seat in the housing cover.
2. Insert the stationary part of the mechanical seal (9.1) carefully into the housing cover (10).
3. Optional: Push the sleeve onto the shaft.
4. Screw the housing cover (10) onto the bearing bracket with the interior hexagonal head screws (15).
5. Push the rotating part of the mechanical seal (9.1) onto the shaft (optional: sleeve).
6. Push the spacer (9.2) onto the shaft.

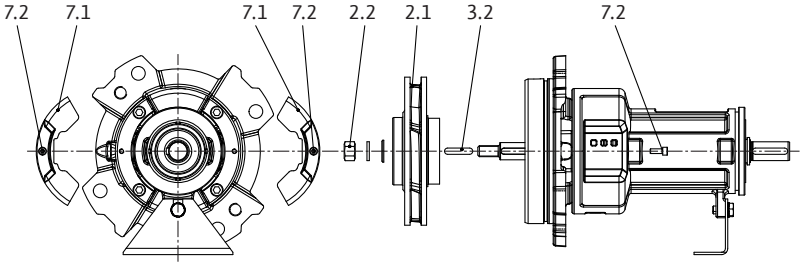

Fig. 29: Fitting the slide-in unit

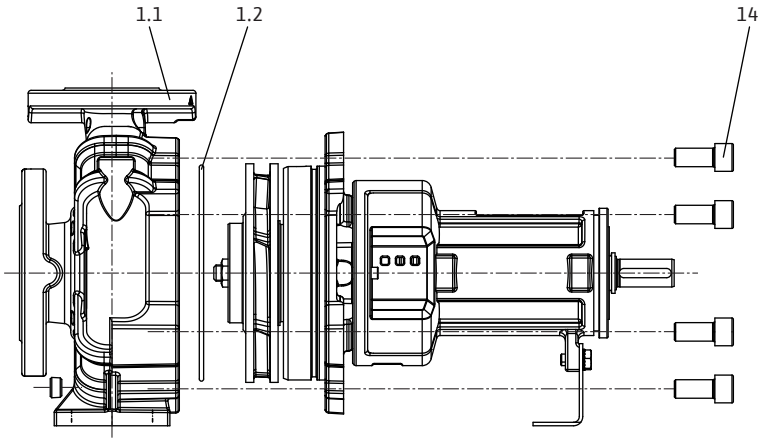

Fig. 30: Inserting the slide-in unit

1. Mark positions of the parts that belong together with a coloured pen or scriber.
2. Mount the impeller disc, impeller (2.1) and key(s) (3.2) on the shaft and tighten with the impeller nut (2.2).
3. Mount the protective grid (7.1) with interior hexagonal head screws (7.2).
4. Put the slide-in unit down at a safe workplace. To continue dismantling the slide-in unit, fix it **vertically** in position with the drive shaft facing downward. The kit must be removed vertically to avoid damage to the impellers, neck rings and other parts.
5. Insert a new housing seal (1.2).
6. Carefully insert the slide-in unit into the spiral housing (1.1) and tighten with the hexagon head screws (14).

9.6.3 Screw tightening torques

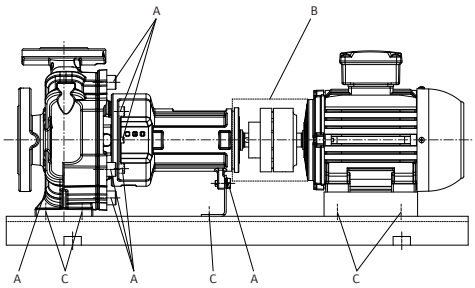

Fig. 31: Screw tightening torques

When tightening the screws, use the following tightening torques.

→ A (pump)

Thread:	M8	M10	M12	M16	M20	M24
Tightening torque [Nm]	25	35	60	100	170	350

Table 9: Screw tightening torque A (pump)

→ B (coupling): Refer to table "Tightening torques for adjusting screws and coupling halves" in chapter "Coupling alignment".

→ C (baseplate): Refer to table "Tightening torques for pump and motor" in chapter "Alignment of the pump unit".

10 Faults, causes and remedies

DANGER

Risk of death due to electrocution!

Improper conduct when carrying out electrical work can lead to death due to electric shock! Electrical work must be carried out by a qualified electrician in accordance with the locally applicable regulations.

WARNING

No persons are allowed to be present inside the working area of the pump!

Persons may suffer (serious) injuries while the pump is in operation! No persons may therefore be present inside the working area. If persons must enter the working area of the pump, the pump must be decommissioned and secured against being switched on again without authorisation.



WARNING

Sharp edges on the impeller!

Sharp edges can form on the impeller. There is danger of limbs being severed! Protective gloves must be worn to protect against cuts.

Further steps for troubleshooting

If the points listed here do not rectify the fault, contact customer service. Customer service can assist in the following ways:

→ Telephone or written support.
→ On-site support.
→ Inspection and repair at the factory.

Costs may be incurred if you request customer services! Please contact customer services for more information.

10.1 Faults

Possible error types

Error type	Description
1	Delivery rate too low
2	Motor overloaded
3	Pump end pressure too high
4	Bearing temperature too high
5	Pump housing leakage
6	Shaft seal leakage
7	Pump does not run smoothly or is loud
8	Pump temperature too high

Table 10: Error types

10.2 Causes and remedies

Error type:									
1	2	3	4	5	6	7	8	Cause	Remedy
X								Counter pressure too high	– Check system for contaminants – Reset the duty point
X						X	X	Pump and/or piping not completely filled	– Vent pump and fill suction line
X						X	X	Inlet pressure too low or negative suction head too high	– Correct the fluid level – Minimise resistances in the suction line – Clean filter – Reduce negative suction head by installing the pump lower
X	X				X			Sealing gap too large due to wear	– Exchange worn neck ring
X								Incorrect direction of rotation	– Change the motor connection phases
X								Pump sucks air or the suction line is leaky	– Replace gasket – Check suction line
X								Supply line or impeller clogged	– Remove clog
X	X							Pump blocked by loose or jammed parts	– Clean pump
X								Air pockets in the piping	– Change the pipe layout or install an air vent valve

Error type:									
1	2	3	4	5	6	7	8	Cause	Remedy
X								Speed too low – with frequency converter operation – without frequency converter operation	– Increase frequency in the permissible range – Check voltage
X	X							Motor running on 2 phases	– Check phases and fuses
	X					X		Counter pressure of the pump too low	– Readjust the duty point or adjust the impeller
	X							The viscosity or density of the fluid is higher than the design value	– Check the pump dimensioning (consult with the manufacturer)
	X		X		X	X	X	The pump is strained	Correct the pump installation
	X	X						Speed too high	Lower speed
			X		X	X		Pump unit poorly aligned	– Correct alignment
			X					Thrust too high	– Clean the relief bores in the impeller – Check the condition of the neck rings
			X					Bearing lubrication not sufficient	Check bearing, exchange bearing
			X					Coupling distance not maintained	– Correct the coupling distance
			X			X	X	– Flow rate too low	– Maintain recommended minimum flow rate
				X				– Housing screws not correctly tightened or gasket defective	– Check tightening torque – Replace gasket
					X			Leak in mechanical seal	– Replace the mechanical seal
					X			Shaft sleeve (if present) worn	– Replace the shaft sleeve
					X	X		Imbalance of the impeller	– Rebalance the impeller
						X		Bearing damage	– Exchange bearing
						X		Foreign object in the pump	– Clean pump
							X	Pump pumps against closed shut-off device	– Open the shut-off device in the pressure pipe

Table 11: Causes of error and remedies

11 Spare parts

Spare parts may be ordered via a local installer and/or Wilo customer service. List of original spare parts: Refer to the Wilo spare parts documentation and the following information in these installation and operating instructions.

CAUTION

Risk of property damage!

Trouble-free pump operation can only be guaranteed when original spare parts are used.

Use only original Wilo spare parts!

Information to be provided when ordering spare parts: Spare part numbers, spare part names/descriptions, all data from the pump rating plate.

11.1 Spare parts list

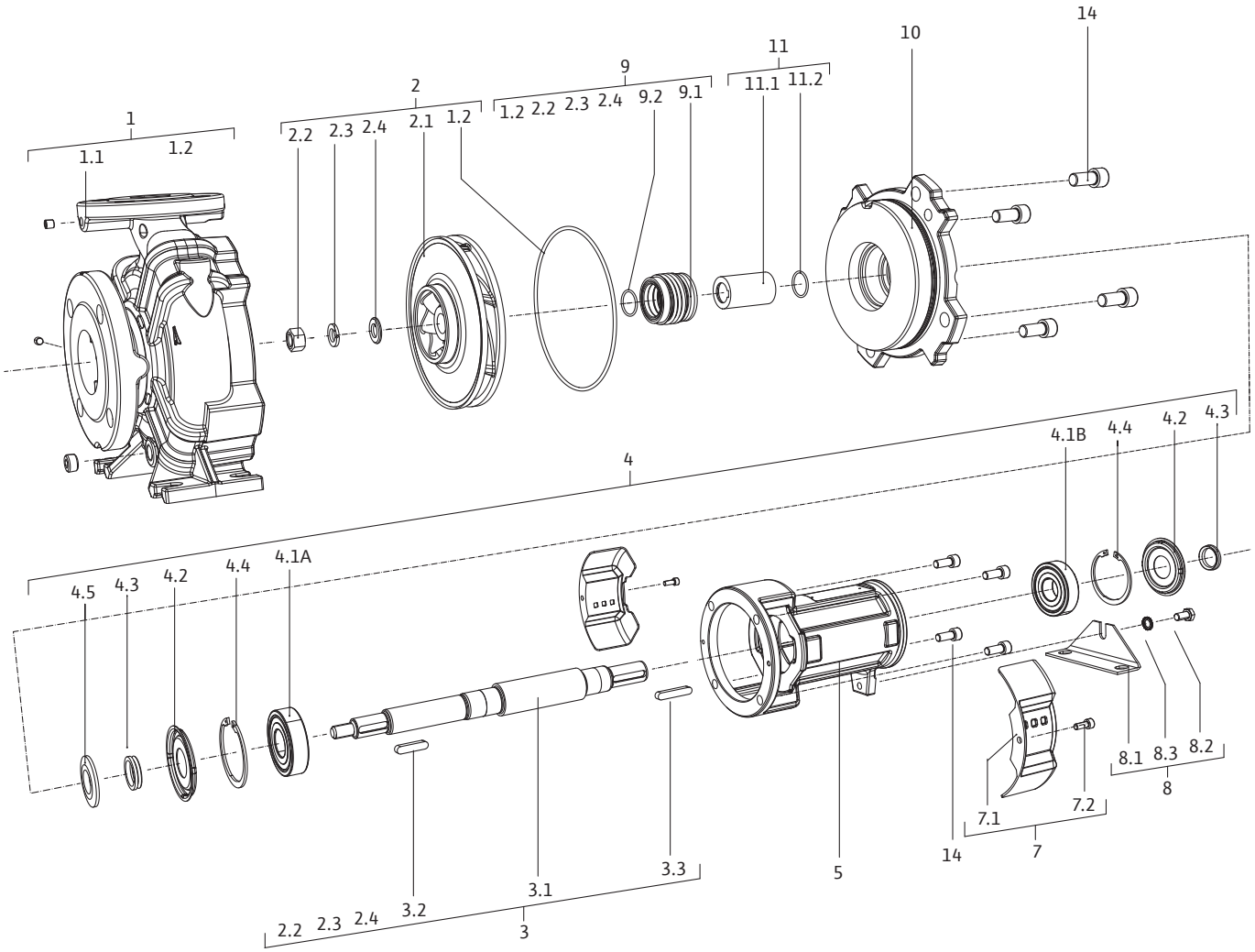

Fig. 32: Pump with mechanical seal

Item no.	Description	Number	Safety-relevant
1.1	Pump housing	1	
1.2	Flat gasket	1	X
2.1	Impeller	1	
2.2	Nut	1	
2.3	Disc	1	
2.4	Disc	1	
3.1	Shaft	1	
3.2	Key	1	
3.3	Key	1	
4.1A	Ball bearing	1	X

Item no.	Description	Number	Safety-relevant
4.1B	Ball bearing	1	X
4.2	Cover	1	
4.3	V-gasket	1	
4.4	Retaining ring	1	
4.5	Thrower	1	
5	Bearing bracket housing	1	
7.1	Shaft protection kit	2	
7.2	Screw	2	
8.1	Supporting foot	1	
8.2	Screw	1	
8.3	Disc	1	
9.1	Mechanical seal	1	X
9.2	Disc	1	
10	Discharge cover	1	
14	Screw	4	
15	Screw	4	

Table 12: Spare parts list, version with mechanical seal

12 Disposal

12.1 Oils and lubricants

Operating fluid must be collected in suitable tanks and disposed of in accordance with the locally applicable guidelines (e.g. 2008/98/EC).

12.2 Water-glycol mixture

The operating fluid complies with Water Hazard Class 1 of the German Administrative Regulation of Substances Hazardous to Water (VwVwS). When disposing of it, the locally applicable guidelines (e.g. DIN 52900 on propanediol and propylene glycol) must be observed.

12.3 Protective clothing

Used protective clothing must be disposed of in accordance with the locally applicable guidelines (e.g. 2008/98/EC).

12.4 Information on the collection of used electrical and electronic products

Proper disposal and appropriate recycling of this product prevents damage to the environment and danger to your personal health.



NOTICE

Disposal in domestic waste is forbidden!

In the European Union, this symbol can appear on the product, the packaging or the accompanying documentation. It means that the electrical and electronic products in question must not be disposed of along with domestic waste.

To ensure proper handling, recycling and disposal of the used products in question, please note the following points:

→ Only hand over these products at designated, certified collecting points.
→ Observe the locally applicable regulations!

Please consult your local municipality, the nearest waste disposal site, or the dealer who sold the product to you for information on proper disposal. Further recycling information at www.salmson-recycling.com.

Please consult your local municipality, the nearest waste disposal site, or the dealer who sold the product to you for information on proper disposal. Further recycling information at www.wilo-recycling.com.



wilo



Local contact at
www.wilo.com/contact

WILO SE
Wilopark 1
44263 Dortmund
Germany
T +49 (0)231 4102-0
T +49 (0)231 4102-7363
wilo@wilo.com
www.wilo.com

Pioneering for You