Pioneering for You

Wilo-Stratos GIGA
Wilo-Stratos GIGA-D
Wilo-Stratos GIGA B

(11 – 22 kW)



en Installation and operating instructions

2234260 • Ed.01/2024-02



Stratos GIGA
https://qr.wilo.com/239

Stratos GIGA B
https://qr.wilo.com/220

Stratos GIGA-D
https://qr.wilo.com/240

Fig. I Stratos GIGA

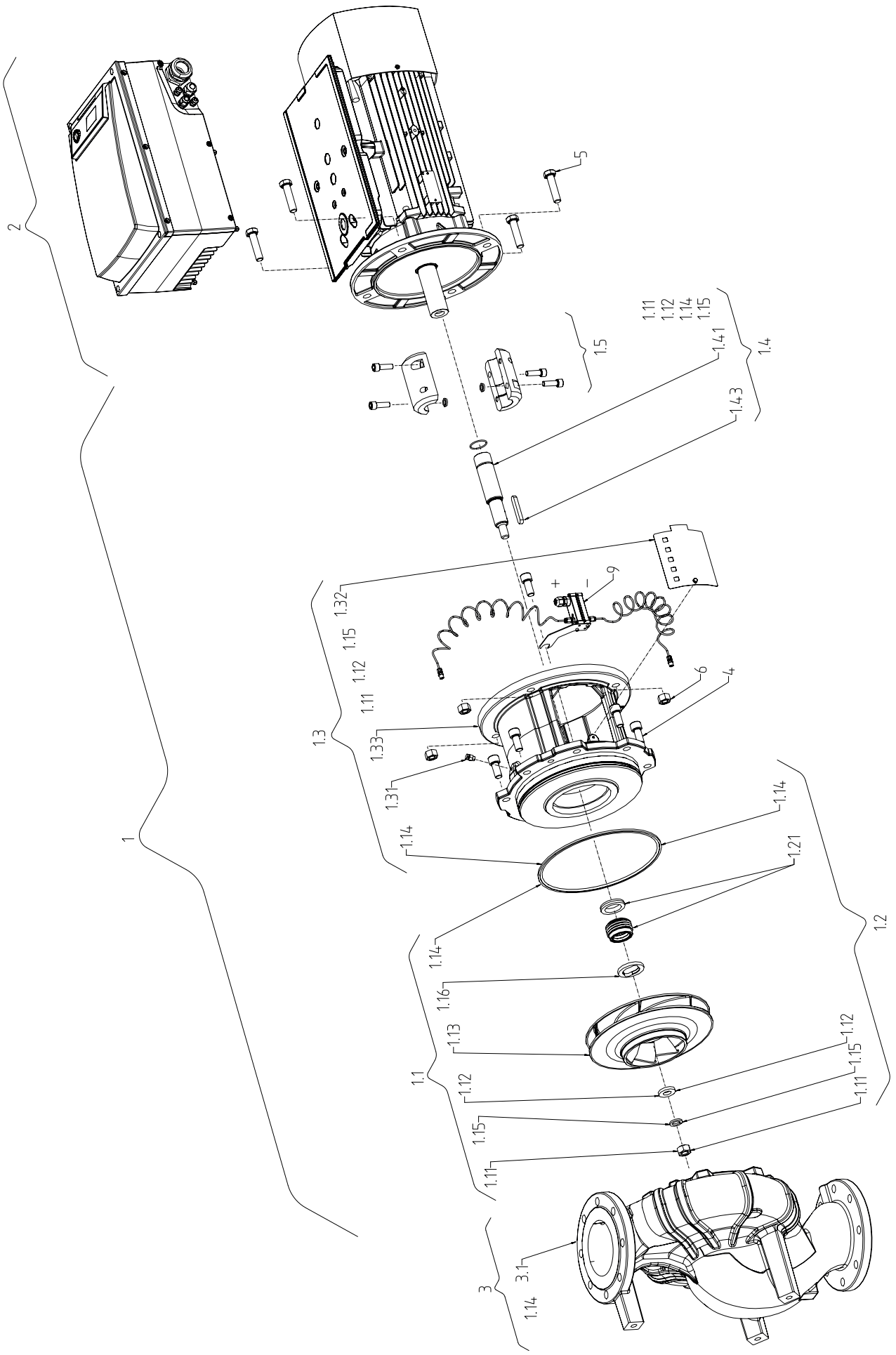

Fig. II: Stratos GIGA B

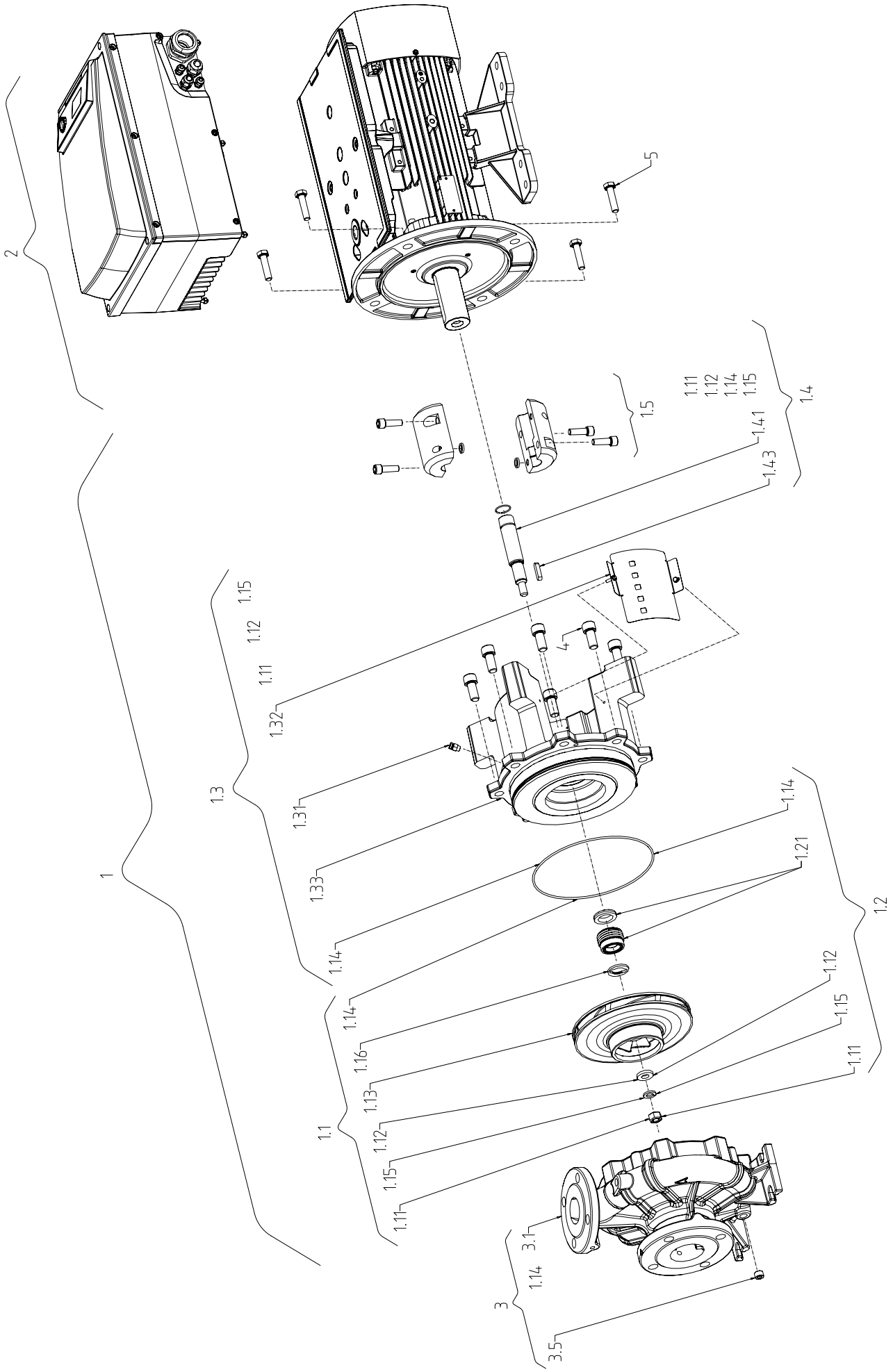

Fig. III: Stratos GIGA-D

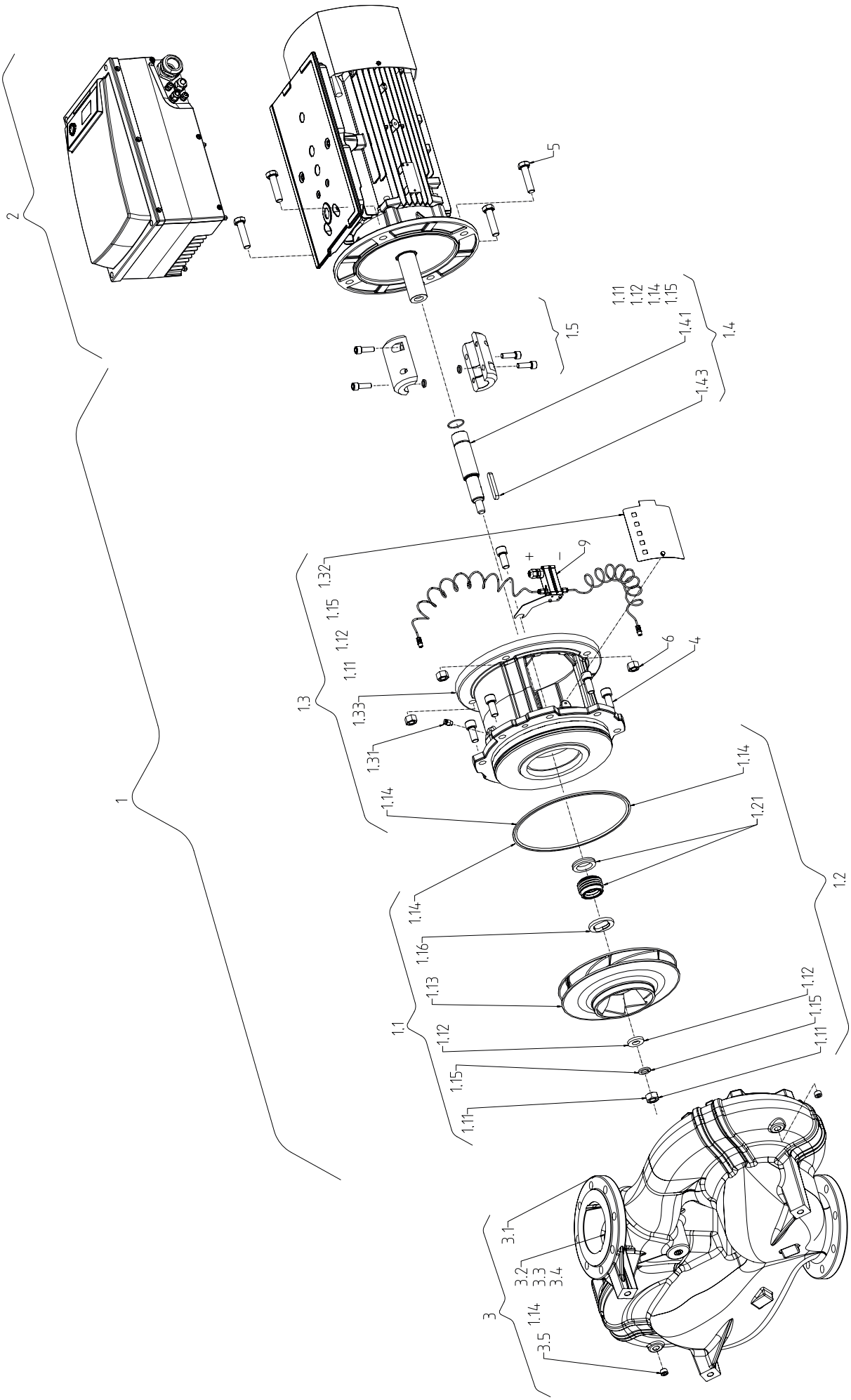

Fig. IV a: ≤ DN 80

Fig. IV b: DN 100 / DN 125

Fig. IV c: DN 150 / DN 200

Table of contents

1 General ... 8
- 1.1 About these instructions ... 8
- 1.2 Copyright ... 8
- 1.3 Subject to change ... 8

2 Safety ... 8
- 2.1 Identification of safety instructions ... 8
- 2.2 Personnel qualifications ... 9
- 2.3 Electrical work ... 10
- 2.4 Transport ... 11
- 2.5 Installing/dismantling ... 11
- 2.6 During operation ... 12
- 2.7 Maintenance tasks ... 13
- 2.8 Operator responsibilities ... 13

3 Transport and storage ... 14
- 3.1 Shipping ... 14
- 3.2 Transport inspection ... 14
- 3.3 Storage ... 14
- 3.4 Transport for installation/dismantling purposes ... 15

4 Application/use ... 16
- 4.1 Intended use ... 16
- 4.2 Misuse ... 17

5 Product information ... 17
- 5.1 Type key ... 17
- 5.2 Technical data ... 17
- 5.3 Scope of delivery ... 19
- 5.4 Accessories ... 19

6 Description of the pump ... 19
- 6.1 Design ... 19
- 6.2 Electronic module ... 20
- 6.3 Control modes ... 20
- 6.4 Twin-head pump function/Y-pipe application ... 21
- 6.5 Other functions ... 25
- 6.6 Variants ... 26

7 Installation ... 26
- 7.1 Personnel qualifications ... 26
- 7.2 Operator responsibilities ... 26
- 7.3 Safety ... 26
- 7.4 Permitted installation positions and change of the arrangement of components before the installation ... 27
- 7.5 Preparing the installation ... 30

8 Electrical connection ... 35
- 8.1 Fuse on mains side ... 36
- 8.2 Requirements and limit values for harmonic currents ... 37
- 8.3 Preparing the electrical connection ... 37
- 8.4 Terminals ... 39
- 8.5 Terminal assignment ... 40
- 8.6 Differential pressure sensor connection ... 41
- 8.7 Making the electrical connection ... 41

9 Protective devices ... 42

10 Commissioning ... 42
- 10.1 Personnel qualifications ... 43
- 10.2 Filling and venting ... 43
- 10.3 Twin-head pump installation/Y-pipe installation ... 44
- 10.4 Setting of pump output ... 44
- 10.5 Switching on the pump ... 45
- 10.6 Behaviour after being switched on ... 46
- 10.7 Operation ... 46
- 10.8 Setting the control mode ... 47

11 Pump operation ... 48
- 11.1 Operating elements ... 48
- 11.2 Display structure ... 49
- 11.3 Explanation of standard symbols ... 49
- 11.4 Symbols in graphics/instructions ... 49
- 11.5 Display modes ... 50
- 11.6 Operating instructions ... 52
- 11.7 Menu elements reference ... 55

12 Decommissioning ... 61
- 12.1 Switching off the pump and temporary shutdown ... 61
- 12.2 Shutdown and storage ... 61

13 Maintenance/repair ... 62
- 13.1 Operation monitoring ... 64
- 13.2 Maintenance tasks ... 64
- 13.3 Draining and cleaning ... 64
- 13.4 Replacing the mechanical seal ... 65
- 13.5 Replacing the motor/drive ... 67

14 Spare parts ... 71

15 Faults, causes and remedies ... 72
- 15.1 Mechanical faults ... 74
- 15.2 Error codes, display ... 75
- 15.3 Acknowledge fault ... 78

16 Factory settings ... 83

17 Disposal ... 83
- 17.1 Oils and lubricants ... 83
- 17.2 Water-glycol mixture ... 83
- 17.3 Protective clothing ... 83
- 17.4 Information on the collection of used electrical and electronic products ... 83

1 General

1.1 About these instructions

These instructions form part of the product. Compliance with the instructions is essential for correct handling and use:

- Read the instructions carefully before all activities.
- Keep the instructions in an accessible place at all times.
- Observe all product specifications.
- Observe the markings on the product.

The language of the original operating instructions is German. All other languages of these instructions are translations of the original operating instructions.

1.2 Copyright

WILO SE © 2024

The reproduction, distribution and utilisation of this document in addition to communication of its contents to others without express consent is prohibited. Offenders will be held liable for payment of damages. All rights reserved.

1.3 Subject to change

Wilo shall reserve the right to change the listed data without notice and shall not be liable for technical inaccuracies and/or omissions. The illustrations used may differ from the original and are intended as an exemplary representation of the product.

2 Safety

This chapter contains basic instructions for the individual life cycles of the product. Failure to observe this information carries the following risks:

- Danger to persons from electrical, mechanical and bacteriological effects as well as electromagnetic fields
- Environmental damage from discharge of hazardous substances
- Damage to property
- Failure of important product functions
- Failure of required maintenance and repair procedures

Failure to observe the instructions will result in the loss of any claims for damages.

The directions and safety instructions in the other sections must also be observed!

2.1 Identification of safety instructions

These installation and operating instructions set out safety instructions for preventing personal injury and damage to property. These safety instructions are shown differently:

- Safety instructions relating to personal injury start with a signal word, are **preceded by a corresponding symbol** and are shaded in grey.



DANGER

Type and source of the danger!

Consequences of danger and instructions for avoidance.

- Safety instructions relating to property damage start with a signal word and are displayed **without** a symbol.

CAUTION

Type and source of the danger!

Consequences or information.

Signal words

- **DANGER!**
  Failure to follow the instructions will result in serious injuries or death!
- **WARNING!**
  Failure to follow the instructions can lead to (serious) injury!
- **CAUTION!**
  Failure to follow the instructions can lead to potentially irreparable property damage.
- **NOTICE!**
  Useful information on handling the product

Symbols

These instructions use the following symbols:


Danger – high voltage


General warning symbol


Warning – risk of cutting injuries


Warning – hot surfaces


Personal protective equipment: wear safety footwear


Personal protective equipment: Wear safety gloves


Personal protective equipment: wear safety glasses


Useful information

2.2 Personnel qualifications

Staff must:

- be instructed about locally applicable regulations governing accident prevention,
- have read and understood the installation and operating instructions.

Personnel must have the following qualifications:

- Electrical work: a qualified electrician must carry out the electrical work.
- Installation/dismantling: The technician must be trained in the use of the necessary tools and fixation materials.
- The product must be operated by persons who have been instructed on how the complete system functions.
- Maintenance work: The technician must be familiar with the use of operating fluids and their disposal.

Definition of "qualified electrician"

A qualified electrician is a person with appropriate technical education, knowledge and experience who can identify **and** prevent electrical hazards.

The operator must confirm and ensure the field of authority, the competence and the monitoring of the personnel. If the personnel do not possess the necessary knowledge, they must be trained and instructed. If required, this can be carried out by the product manufacturer at the operator's request.

2.3 Electrical work

- Have electrical work carried out by a qualified electrician.
- When connecting to the mains supply, comply with the nationally applicable guidelines, standards and regulations as well as specifications issued by the local energy supply companies.
- Before commencing work, disconnect the product from the mains and secure it against being switched on again.
- Give staff training on how to establish the electrical connection and the methods for switching off the product.
- Protect the electrical connection with a residual-current device (RCD).
- Observe the technical information in these installation and operating instructions as well as on the rating plate.
- Earth the product.
- Comply with the manufacturer's specifications when connecting the product to electrical switching systems.
- Have a defective connection cable replaced immediately by a qualified electrician.
- Never remove operating elements.



DANGER

When dismantled, the permanent magnet rotor inside the pump can pose mortal danger for people with medical implants (e.g. pacemakers).

- Follow the general behavioural guidelines that apply to handling electrical devices!
- Do not open the motor!
- Dismantling and installation of the rotor may only be carried out by Wilo customer service! If you have been fitted with a pacemaker, you must **not** carry out this kind of work!

NOTICE

The magnets inside the motor do not pose a danger **provided the motor is completely assembled**. Persons with pacemakers can approach the pump without restrictions.

2.4 Transport

- Wear protective equipment:
  - Safety gloves for protection against cuts
  - Safety shoes
  - Sealed safety glasses
  - Safety helmet (when using lifting equipment)
- Only use legally specified and approved lifting slings.
- Select the lifting sling based on the prevailing conditions (weather, slinging point, load etc.).
- Always attach the lifting sling to the designated slinging points (lifting eyes).
- Position the lifting accessory in a way that ensures stability during use.
- When using lifting equipment, a second person must be present to coordinate the procedure if required (e.g. if the operator's field of vision is blocked).
- Persons must not stand underneath suspended loads. Do **not** move loads over workplaces where people are present.

Please note the following information during transport and prior to installation:

- Do not reach into suction ports, discharge ports or other openings.
- Avoid the penetration of foreign objects. To this end, leave the protective covers or packaging on until they have to be removed for installation.
- Packaging and covers may be removed from suction or outlet openings for inspection purposes. They must be put back on afterwards to protect the pump and ensure safety.

2.5 Installing/dismantling

- Wear protective equipment:
  - Safety shoes
  - Safety gloves for protection against cuts
  - Safety helmet (when using lifting equipment)
- Locally applicable laws and regulations on work safety and accident prevention must be complied with.
- The procedure described in the installation and operating instructions for shutting down the product/unit must be strictly observed.
- Disconnect the device from the mains and secure it against being switched on again without authorisation.
- All rotating parts must be at a standstill.

- Close the gate valve in the inlet and in the pressure pipe.
- Provide adequate aeration in enclosed spaces.
- Clean the device thoroughly. Disinfect devices that use fluids hazardous to health!
- Make sure that there is no risk of explosion when carrying out any type of welding work or work with electrical devices.

2.6 During operation

- Wear protective equipment:
  - Safety shoes
  - Safety gloves for protection against cuts
  - Safety helmet (when using lifting accessories)
- The work area in which the product is used is not a recreational area. No persons are allowed in the work area during operation.
- The operator must report any faults or irregularities to a line manager immediately.
- If hazardous defects occur, the operator must immediately deactivate the device. Hazardous defects include:
  - Malfunction of safety and monitoring devices
  - Damage to housing parts
  - Damage to electrical equipment
- Open all gate valves in the piping on both the suction and discharge sides.
- Collect any leakage of fluids and operating fluids immediately and dispose of it according to the locally applicable guidelines.
- Tools and other objects should only be kept in their designated places.

Thermal hazards

Most pump and drive surfaces can become hot during operation.

The surfaces in question also remain hot after switching off the unit. These surfaces may only be touched with extreme caution. Wear safety gloves if it is essential to touch hot surfaces.

Make sure that the drained water is not too hot for more intensive contact with skin.

Employ suitable fittings to protect components that can become hot against skin contact.
Such fittings must not impair the ventilation required for cooling.

Hazard due to articles of clothing or other objects being caught

To avoid the dangers presented by the rotating parts of the product:

- Do not wear loose or frayed clothing or jewellery.
- Do not dismantle devices for protecting against accidental contact with moving parts (e.g. coupling guard).
- Only put the device into operation once this protection is in place.

- The devices for protecting against accidental contact with moving parts may only be removed when the system is at a standstill.

Hazards due to noise

Observe the applicable health and safety regulations. If the device is operated under normal operating conditions, the operator must measure the sound pressure.

Sound pressure levels of 80 dB(A) and above must be noted in the work regulations! The operator must also introduce the following preventative measures:

- Inform the operating personnel
- Provide hearing protection

For a sound pressure level of 85 dB(A) and above, the operator must:

- Make it a mandatory requirement to wear hearing protection
- Demarcate the noisy areas
- Take measures to reduce noise (e.g. insulation, noise barriers)

Leakages

Observe local standards and regulations. Avoid pump leakages to protect persons and the environment against hazardous (explosive, toxic or hot) substances.

Ensure that a dry run of the pump is not possible. A dry run can damage the shaft seal and thereby cause leakages.

2.7 Maintenance tasks

- Wear the following protective equipment:
  - Sealed safety glasses
  - Safety shoes
  - Safety gloves for protection against cuts
- Only carry out the maintenance tasks described in these installation and operating instructions.
- Only original parts from the manufacturer may be used for maintenance and repairs. Use of parts other than original parts releases the manufacturer from any liability.
- Collect any leakage of fluid and operating fluid immediately and dispose of it according to the locally applicable guidelines.
- Tools and other objects should only be kept in their designated places.
- After completing work, reattach all safety and monitoring devices and check that they function properly.

2.8 Operator responsibilities

- Provide installation and operating instructions in a language which the personnel can understand.
- Make sure that personnel are suitably trained for the specified work.

- Verify the area of responsibility and individual responsibilities of personnel.
- Provide the necessary protective equipment and make sure that personnel wears it.
- Train personnel with regard to the operating principles of the system.
- Eliminate risks from electrical current.
- Equip hazardous components (extremely cold, extremely hot, rotating, etc.) with a guard to be provided by the customer.
- Remove leakages of hazardous fluids (e.g. explosive, toxic or hot) in such a way that no danger is posed to persons or the environment. Comply with national statutory provisions.
- Keep highly flammable materials at a safe distance from the product.
- Ensure compliance with the regulations for accident prevention.
- Ensure compliance with local directives or general directives [e.g. IEC, VDE, etc.] and instructions from local energy supply companies.

Follow all information that appears on the product and ensure that it remains permanently legible:

- Warning and hazard notices
- Rating plate
- Direction of rotation arrow/symbol for direction of flow
- Labelling of connections

Children and persons younger than 16 years or with reduced physical, sensory or mental capacities or limited experience are prohibited from handling the product! A technician must supervise persons younger than 18 years!

3 Transport and storage

3.1 Shipping

The pump is secured to a pallet ex works, packaged in a box and protected against dirt and moisture.

3.2 Transport inspection

Check delivery immediately for damage and completeness. Defects must be noted on the freight documentation! Defects must be notified to the transport company or the manufacturer immediately on the day of receipt of shipment. Subsequently notified defects can no longer be claimed for.

Only remove the outer packaging at the place of utilisation to ensure that the pump is not damaged during transport.

3.3 Storage

CAUTION

Damage due to incorrect handling during transport and storage!

Protect the product from moisture, frost and mechanical damage during transport and temporary storage.

If available, leave the covers on the pipe connections so that no dirt and other foreign matter can get into the pump housing.

To avoid scoring at the bearings and sticking, turn the pump shaft once a week using a socket wrench.

If a longer storage time is required, contact Wilo for preservation measures.



WARNING

Risk of injury due to incorrect transport!

If the pump is transported again at a later date, it must be packaged so that it cannot be damaged during transport. Use the original packaging for this or choose equivalent packaging.

3.4 Transport for installation/dismantling purposes



WARNING

Risk of personal injury!

Incorrect transport can lead to personal injury!

- Unload boxes, lathed spaces, pallets or cartons, depending on the size and construction, with forklift trucks or with slings.
- Always lift heavy parts of more than 30 kg with hoisting gear that is in accordance with local regulations.
  - The bearing capacity has to be adapted to the weight!
- Transport the pump using approved lifting gear (block and tackle, crane etc.). Lifting gear must be attached to the pump flanges and, if necessary, to the outer motor diameter.
  - Securing against slipping is required for this!
- When lifting machines or parts with eyelets, only use load hooks or shackles that are in accordance with local safety regulations.
- Transport lugs on the motor, if present, are only for transporting the motor. They are not approved for transporting the complete pump.
- Use a guard if load chains or ropes are guided over or through eyelets or over sharp edges.
- When using a block and tackle or similar hoisting gear, make sure that the load is lifted vertically.
- Prevent the suspended load from swinging.
  - Swinging can be avoided by using a second block and tackle. The direction of pull of both block and tackles must be less than 30° to the vertical.
- Never subject load hooks, eyelets or shackles to bending forces – their load axes have to be in the direction of the tractive forces!
- When lifting, make sure that the load limit of a load rope is reduced for diagonal pulling.
  - The safety and effectiveness of a stranding is best ensured when all load-bearing elements are loaded in the vertical direction to the greatest extent possible. If required, use a lifting arm which can be attached vertically to the load rope.
- Set up a safety zone in such a way that there is no danger if the load or a part of the load slips or the hoisting gear breaks or tears.
- Never leave a load longer than necessary in a suspended position! Make sure there is no danger to the personnel when accelerating and slowing down during the lifting procedure.

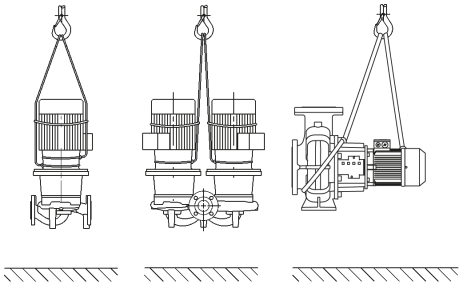

Fig. 1: Transporting the pump

For lifting with a crane, the pump must be supported by suitable belts or load ropes, as shown. Place belts or load ropes in loops around the pump, which tighten from the pump's own net weight.

Transport lugs on the motor, if present, are only for guiding when the load is being carried!

WARNING

Damaged transport lugs can break off and cause considerable personal injury.

- Check the transport lugs before use for damage and secure fixation.

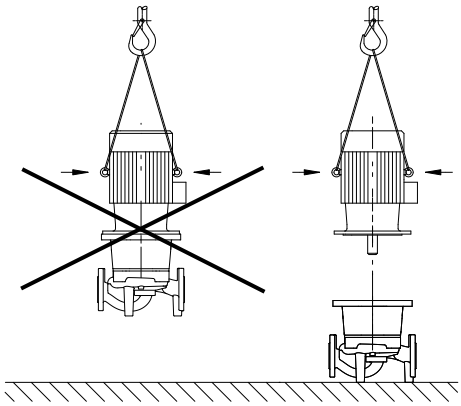

Fig. 2: Transporting the motor

Transport lugs on the motor, if present, are only for transporting the motor. They are not approved for transporting the complete pump!

DANGER

Danger of death from falling parts!

The pump itself and pump parts can have a very high net weight. Falling parts pose a risk of cuts, crush injuries, bruises or impacts, which can be fatal.

- Always use suitable lifting accessories and secure parts against falling.
- Never stand below a suspended load.
- During storage and transport, as well as before all installation and assembly work, ensure that the pump is in a safe position and standing securely.

WARNING

Personal injury due to unsecured installation of the pump!

The base with the threaded holes is used for fixation only. When standing freely, the pump might not be sufficiently stable.

- Never place the pump unsecured on the pump support feet.

4 Application/use

4.1 Intended use

Glanded pumps in the Stratos GIGA series (in-line single), Stratos GIGA-D series (in-line double) and Stratos GIGA B series (monobloc) are intended for use as circulators in building services.

They may be used for:

- Hot-water heating systems
- Cooling and chilled water circulation systems
- Industrial circulation systems
- Heat carrier circuits
- Irrigation

The pumps are only approved for the fluids specified in the "Technical data" section.

Installation within a building:

Typical installation locations are technical rooms within the building with other domestic installations. No provision has been made for direct installation of the pump in rooms used for other purposes (residential and work rooms). The installation location must be dry, well ventilated and frost-resistant.

Installation outside a building (outdoor installation)

- Observe permissible environmental conditions and protection class.
- Install the pump in a housing as weather protection. Observe permissible ambient temperatures (see "Technical data" table).
- Protect the pump against the effects of weather, for example, direct sunlight, rain and snow.
- Protect the pump so that the condensate drain openings remain free of dirt.
- Take suitable measures to prevent the formation of condensation water.

Intended use also includes observance of these instructions. Any other use is regarded as improper.

4.2 Misuse



WARNING

Misuse of the pump can lead to dangerous situations and damage!

Non-permitted substances in the fluid can destroy the pump. Abrasive solids (e.g. sand) increase pump wear.

- Never use fluids other than those approved by the manufacturer.
- Highly flammable materials/fluids should always be kept at a safe distance from the device.
- Never allow unauthorised persons to carry out work.
- Never operate the pump beyond the specified limits of use.
- Never carry out unauthorised conversions.
- Use authorised accessories and genuine spare parts only.

5 Product information

5.1 Type key

Example:

Stratos GIGA 40/4-63/11-xx
Stratos GIGA-D 40/4-63/11-xx
Stratos GIGA B 32/4-63/11-xx

Stratos GIGA GIGA-D GIGA B	High-efficiency flange-end pump as: In-line single pump In-line twin-head pump Monobloc pump
80	Nominal diameter DN of the flange connection in mm (for Stratos GIGA B: discharge side)
4-63	Delivery head range in [m] with Q = 0 m³/h 4 = lowest selectable delivery head 63 = highest selectable delivery head
11	Rated power P2 in kW
xx	Variant, e.g. R1 – without differential pressure sensor

Table 1: Type key

5.2 Technical data

Property	Value	Note
Speed range	750 ... 2900 rpm 380 ... 1450 rpm	Depending on pump type
Nominal diameters DN	Stratos GIGA/Stratos GIGA-D: 40 ... 200 mm Stratos GIGA B: 32 ... 150 mm (discharge side)	
Pipe and pressure measurement connections	Flange PN 16 in accordance with DIN EN 1092-2	
Permissible min./max. fluid temperature	-20 °C ... +140 °C	Depends on fluid
Ambient temperature during operation min./max.	0 °C ... +40 °C	Lower or higher ambient temperatures on request
Temperature during storage min./max.	-20 °C ... +60 °C	
Max. permissible operating pressure	16 bar (to +120 °C) 13 bar (to +140 °C)	
Insulation class	F	
Protection class	IP55	

Property	Value	Note
Electromagnetic compatibility[1)]		
Interference emission in acc. with: Interference immunity in acc. with:	EN 61800-3:2018-09 EN 61800-3:2018-09	Residential environment (C1) Industrial environment (C2)
Sound-pressure level[2)]	$L_{pA,1\,m}$ < 83 dB (A) | ref. 20 µPa	Depending on pump type
Permissible fluids[3)]	Heating water in accordance with VDI 2035 part 1 and part 2 Cooling/chilled water Water-glycol mixture to 40% vol. Water-glycol mixture to 50% vol.	Standard version Standard version Standard version Special version only
Permissible fluids[3)]	Heat carrier oil Other fluids (on request)	Special version or auxiliary equipment (at additional charge)
Electrical connection	3~380 V -5% +10% 50/60 Hz 3~400 V ±10%, 50/60 Hz 3~440 V, ±10%, 50/60 Hz	Supported mains types: TN, TT, IT[4)]
Internal electric circuit	PELV, galvanically isolated	
Speed control	Built-in frequency converter	
Relative humidity	For $T_{environment}$ = 30 °C: 90%, non-condensing For $T_{environment}$ = 40 °C: 60%, non-condensing	

[1)] This product is a professional device within the meaning of EN 61000-3-2.
[2)] Mean value of the sound-pressure levels on a spatial cuboid measuring surface at a distance of 1 m from the pump surface in accordance with DIN EN ISO 3744.
[3)] For additional information on permissible fluids, see “Fluids”.
[4)] For motor powers of 11 ... 22 kW, electronic modules for IT networks are optionally available. Compliance with the specified values in accordance with EN 61800-3 can only be guaranteed for the standard version of TN/TT networks. Non-observance can result in EMC faults.

Table 2: Technical data

Additional information CH	Permissible fluids
Heating pumps	Heating water (in accordance with VDI 2035/VdTÜV Tch 1466/**CH: in accordance with SWKI BT 102-01)** ... No oxygen binding agents, no chemical sealants (ensure closed system from corrosion perspective according to VDI 2035 **(CH: SWKI BT 102-01)**; rework leaky points).

Note that water-glycol mixtures or fluids with a viscosity different than that of clean water increase the power consumption of the pump. Only use mixtures with corrosion protection.
Observe the relevant manufacturer’s specifications!

- The fluid must be sediment-free.
- Wilo’s approval must be obtained for the use of other fluids.
- Mixtures with a glycol content > 10% influence the flow calculation.
- When using water-glycol mixtures, the use of an S1 variant with a corresponding mechanical seal is generally recommended.

- In systems built according to the state of the art, it can be assumed under normal system conditions that the standard seal/standard mechanical seal is compatible with the fluid.
  Special circumstances may require special seals, for example:
  - solids, oils or EPDM-attacking substances in the fluid,
  - air content in the system, etc.

NOTICE

The flow value shown on the IR Stick's display or that is output to the building management system must not be used to control the pump. This value is merely an indicator of general trends.

A flow value is not output on every pump type.

Always observe the safety data sheet for the fluid to be pumped!

5.3 Scope of delivery

- Pump
- Installation and operating instructions

5.4 Accessories

Accessories must be ordered separately:

Stratos GIGA/Stratos GIGA-D:

- 3 mounting brackets with fixation material for installation on a base

Stratos GIGA B:

- Supports for installation on a base or baseplate
- Blind flanges for twin-head pump housing
- IR-Stick
- IF module PLR for connecting to PLR/interface converter
- IF module LON for connection to the LONWORKS network
- IF module BACnet
- IF module Modbus
- CAN IF module
- Wilo-Smart IF module
- DDG kit

For a detailed list, consult the catalogue and spare parts documentation.

NOTICE

IF modules may only be plugged in when the pump is de-energised (voltage-free).

6 Description of the pump

6.1 Design

The Wilo-Stratos GIGA high-efficiency pumps are glanded pumps with built-in power adjustment and "Electronic Commutated Motor" (ECM) technology. The pumps are designed as single-stage low-pressure centrifugal pumps with flange connection and mechanical seal.

Stratos GIGA/Stratos GIGA-D version

The pump housing has an in-line design, i.e. the flanges on the suction and discharge sides lie along a centre line. All pump housings are equipped with cast-on pump feet. Installation on a base is recommended for units with a rated power of ≥ 5.5 kW and above.

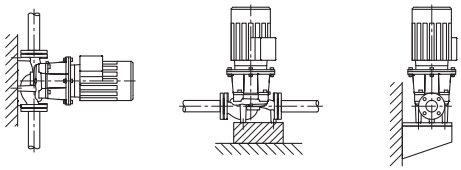

Fig. 3: Views of Stratos GIGA

NOTICE

Blind flanges (accessories) are available for all pump types/housing sizes from the Stratos GIGA-D series. This means a motor impeller unit can always be replaced in twin-head pump housing. A drive can therefore remain in operation.

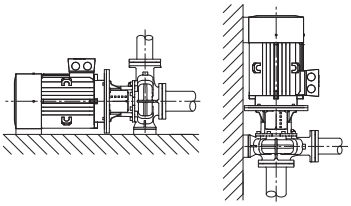

Fig. 4: Views of Stratos GIGA B

Stratos GIGA B version

Spiral housing pump with dimensions in accordance with DIN EN 733.

All pump housings are equipped with cast-on pump feet. From motor power ≥ 5.5 kW: Motors with cast or screwed-on feet.

Installation on a base is recommended for units with a rated power of ≥ 5.5 kW and above.

6.2 Electronic module

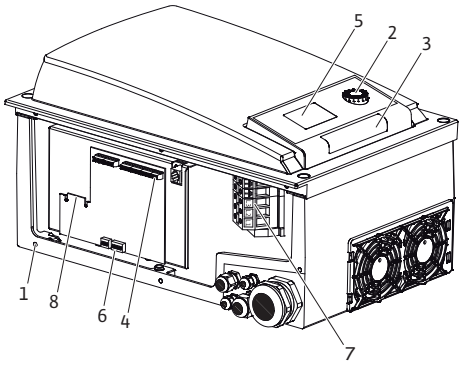

Fig. 5: Electronic module, overview

Depending on the differential pressure and the set control mode, the electronic module regulates the speed of the pump to a setpoint that can be adjusted within the permissible control range.

Continuous adaptation of the hydraulic output adapts to the system's changing requirements. Changing requirements can be expected especially when thermostatic valves or mixers are used.

The basic advantages of the electronic control are:

- Energy saving at the same time as reduced operating costs
- Reduced number of differential pressure valves required
- Reduction of flow noise
- Modification of the pump to changing operating requirements

1	Fixing points on cover
2	Operating button
3	Infrared window
4	Control terminals
5	Display
6	DIP switch
7	Power terminals (mains terminals)
8	Interface for IF module

6.3 Control modes

NOTICE

For information on setting the control mode and related parameters, see section "Operation" and section "Setting the control mode".

Available control modes are:

Constant differential pressure (Δp-c)

The control keeps the delivery head constant at the set differential pressure setpoint H_s. Control is independent of the volume flow and operates until the maximum characteristic curve is reached.

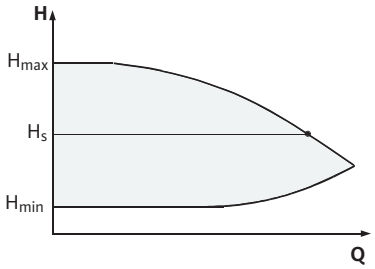

Fig. 6: Control mode Δp-c

Q = Volume flow

H = Differential pressure (min./max.)

H_s = Differential pressure setpoint

Variable differential pressure (Δp-v)

The electronics change the differential pressure setpoint to be maintained by the pump linearly between the delivery head H_s and ½ H_s. The differential pressure setpoint H_s decreases or increases with the volume flow.

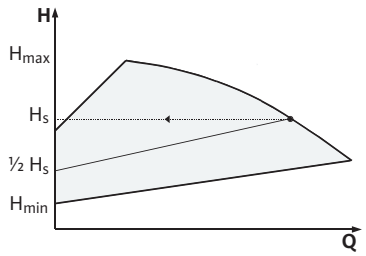

Fig. 7: Control mode Δp-v

Q = Volume flow

H = Differential pressure (min./max.)

H_s = Differential pressure setpoint

NOTICE

A differential pressure sensor is needed for the control modes that are being performed (Δp-c and Δp-v) which sends the actual value to the electronic module.

NOTICE

The pressure range of the differential pressure sensor must match the pressure value in the electronic module (menu <4.1.1.0>).

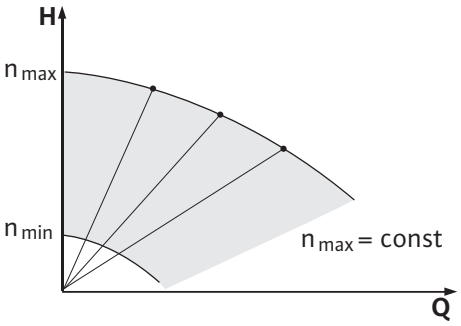

Fig. 8: Constant speed

Constant speed

The pump speed can be kept at a constant speed between n_{min} und n_{max}. “Constant speed” mode deactivates all other control modes.

PID control

If other sensors are used or if the distance between the sensors and the pump is very large, the standard control modes are not applicable. In these cases, the “PID-Control” function (**P**roportional **I**ntegral **D**ifferential control) is available.

By selecting a good combination of individual control elements, the operator can ensure fast-reacting, constant control without lasting setpoint deviations. The output signal of the selected sensor can accept any intermediate value. The relevant actual value reached (sensor signal) will be shown as a percentage on the status page of the menu (100 % = maximum measurement range of the sensor).

NOTICE

The displayed percent value only corresponds indirectly to the current delivery head of the pump(s).

The maximum delivery head can even been reached at a sensor signal of < 100 %.

6.4 Twin-head pump function/Y-pipe application

NOTICE

The properties described in this section are only available if the internal MP interface (MP = Multi Pump) is used.

The main pump controls both pumps.

In the event of a fault in one pump, the other pump runs according to the main pump’s control input. In the event of a total breakdown of the main pump, the partner pump runs at the emergency operation speed. The emergency operation speed can be set in menu <5.6.2.0> (see section “Operation during interruption of communication”).

The main pump’s display shows the status of the twin-head pump. The partner pump’s display shows “SL”.

In the example, the main pump is the left-hand pump in the direction of flow. Connect the differential pressure sensor to this pump!

The measuring points of the differential pressure sensor must be located in the collector pipe on the suction and discharge side of the twin-head pump system.

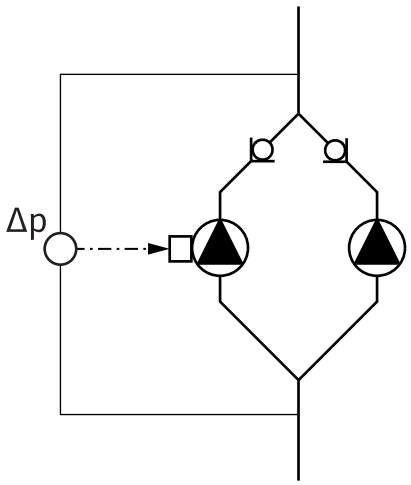

Fig. 9: Example – differential pressure sensor connection in y-pipe installation

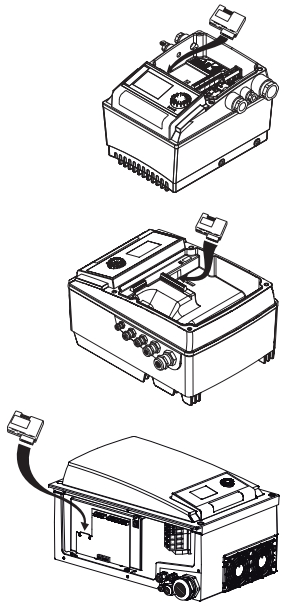

Fig. 10: Insert IF module

6.4.1 Operating modes

6.4.2 Behaviour in twin-head pump operation

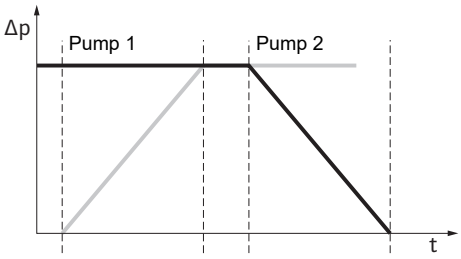

Fig. 11: Pump cycling, schematic representation

Interface module (IF module)

An IF module (accessories) attached in the terminal room is required for communication between pumps and building management systems.

Communication between the main pump and the partner pump is via an internal interface (terminal: MP).

For pumps in Y-pipe applications where the electronic modules are connected to each other via the internal interface, only the main pumps require an IF module.

Communication	Main pump	Partner pump
PLR / Interface converter	IF module PLR	No IF module necessary
LONWORKS network	IF module LON	No IF module necessary
BACnet	BACnet IF module	No IF module necessary
Modbus	Modbus IF module	No IF module necessary
CAN bus	IF module CAN	No IF module necessary

Table 3: IF modules

NOTICE

The procedure and additional explanations on commissioning and configuring the IF module on the pump are described in the installation and operating instructions for the IF module used.

Main/standby operation

Only one pump ever runs at a time. Each of the two pumps provides the configured flow rate. The other pump is available in case of malfunction or runs after pump cycling.

Pump cycling

With twin-head pump operation, pump cycling occurs periodically (the intervals can be set; factory setting = 24 hours).

Pump cycling can be triggered:

- Internally, time-controlled (menu <5.1.3.2> + <5.1.3.3>)
- Externally (menu <5.1.3.2>) by a positive beam on the “AUX” contact
- Manual (menu <5.1.3.1>)

Manual or external pump cycling is possible 5 seconds after the last pump cycling at the earliest.

Activating external pump cycling simultaneously deactivates internal time-controlled pump cycling.

Schematised description of pump cycling operation (see diagram):

- Pump 1 is running (black line)
- Pump 2 is switched on at minimum speed and soon afterwards reaches the setpoint (grey line)
- Pump 1 is switched off
- Pump 2 continues to run until the next pump cycling

NOTICE

In constant speed mode, a slight increase in flow can be expected. Pump cycling is dependent on the ramp time and generally lasts 2 sec. In control mode, there may be minor fluctuations in the delivery head. However, pump 1 adjusts itself to the changed conditions. Pump cycling is dependent on the ramp time and generally lasts 4 sec.

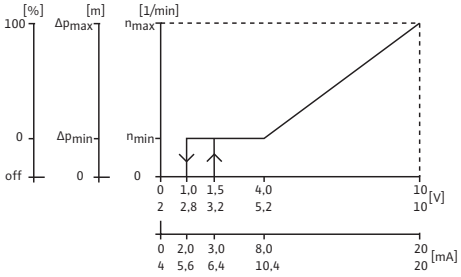

Fig. 12: Behaviour of the inputs and outputs

Behaviour of the inputs and outputs

Actual value input In1, setpoint input In2.

- At the main pump: Affects the entire unit.

“External off"

- At the main pump (menu <5.1.7.0>): Depending on the setting in menu <5.1.7.0>, affects only the main pump or the main and partner pump.
- Set at the partner pump: Only affects the partner pump.

Fault and run signals

Individual (ESM) or collective (SBM) fault signal:

A collective fault message (SSM) can be connected to the main pump for a central control station. The contact may only be assigned to the main pump. The display is for the whole unit.

The contact must be made to each pump for individual fault signals.

On the main pump (or via IR-Stick) this signal can be programmed as a single (ESM) or collective (SSM) fault signal in menu <5.1.5.0>.

The EBM/SBM function can be set to “Standby”, “Operation”, “Mains on” in menu <5.7.6.0> on the main pump.

NOTICE

“Readiness” means: The pump could run, there is no fault.

“Operation” means: Motor turning.

“Mains on” means: Mains voltage is present.

NOTICE

If the “Operation” function has been selected for EBM/SBM, each pump kick issues a signal for a few seconds.

Operating options at the partner pump

The only settings that can be made at the partner pump are “External off” and “Lock/unlock pump”.

NOTICE

If an individual motor is disconnected from the power supply in twin-head pump operation, the integrated twin-head pump management is out of operation.

6.4.3 Operation during interruption of communication

In the event of a communication interruption between two pumps in twin-head pump operation, both displays show error code “E052”. Both pumps behave as single pumps for as long as the interruption lasts.

Both electronic modules report the malfunction via the ESM/SSM contact.

The partner pump runs in emergency operation (constant speed) at the emergency operation speed previously set on the main pump (see menu items <5.6.2.0>).

The emergency operation speed factory setting is equivalent to about 60% of the pump’s maximum speed.

- For 2-pole pumps: n = 1850 rpm
- For 4-pole pumps: n = 925 rpm

After acknowledging the fault display, the status display will be shown on both pump displays for the duration of the communication interruption. This resets the ESM/SSM contact at the same time.

The symbol (pump running in emergency operation) flashes on the partner pump’s display.

The (former) main pump continues to follow the control specifications. The (former) partner pump follows the specifications for emergency operation. Emergency operation can only be exited by initiating the factory setting, remedying the communication interruption or via “Mains off/Mains on”.

NOTICE

The differential pressure sensor is switched to the main pump!

During a communication interruption, the (former) partner pump cannot run in control mode. If the partner pump is running in emergency operation, no changes can be made to the electronic module.
After the communication interruption has been fixed, the pumps resume regular twin-head pump operation as before the fault.

Partner pump behaviour

Exiting emergency operation at the partner pump:

- Factory settings restored

If, during a communication interruption, emergency operation is exited by initiating the factory setting at the (former) partner pump, the (former) partner pump starts with the factory settings of a single pump. It then runs in operating mode Δp-c with about half the maximum delivery head.

NOTICE

If there is no sensor signal, the (former) partner pump runs at maximum speed.

To avoid this, the signal from the differential pressure sensor can be looped through from the (former) main pump. A sensor signal at the partner pump has no effect in normal twin-head pump operation.

- Mains off/mains on

If, during a communication interruption, emergency operation is exited via “Mains off/Mains on” at the (former) partner pump, the (former) partner pump starts with the last specifications it received from the main pump for emergency operation (for example, constant speed control with specified speed or “off”).

Main pump behaviour

Exiting emergency operation at the main pump:

- Factory settings restored
  If, during a communication interruption, the factory setting is initiated at the (former) main pump, it starts with the factory settings of a single pump. It then runs in operating mode Δp-c with about half the maximum delivery head.
- Mains off/mains on
  If, during a communication interruption, operation is interrupted via Mains off/Mains on at the (former) main pump, the (former) main pump starts with the last available specifications from the twin-head pump configuration.

6.4.4 Disabling or enabling a pump

This function is only available for twin-head pump operation. A particular pump can generally be enabled or disabled in terms of operation in menu <5.1.4.0>. A disabled pump cannot be used in operation until the disabling has been manually lifted.

The setting can be made at each pump directly or over the infrared interface. If a pump (main or partner pump) is disabled, it is no longer ready for operation.

In this state, errors are identified, displayed and reported. If a fault occurs in the enabled pump, the disabled pump does not start up. However, pump kicks are carried out if activated. The interval for pump kicks starts when the pump is disabled.

NOTICE

If a pump head is disabled and the operating mode “Parallel operation” is activated:

In this case, it cannot be ensured that the desired duty point can be reached with only one pump head.

6.5 Other functions

6.5.1 Pump kick

NOTICE

If the pump is at a standstill for prolonged periods, the impeller may seize up in the pump housing.

The pump kick reduces this risk. This is intended to ensure pump operation after a long standstill. If the “pump kick” function is deactivated, smooth starting of the pump can no longer be guaranteed.

A pump kick takes place after a configurable time has elapsed since a pump or pump head stopped operating. The interval can be set manually in menu <5.8.1.2> on the pump for a period of between 2 h and 72 h, in 1 h steps. Factory setting: 24 h.

The reason for the standstill is irrelevant. The pump kick is repeated until the pump is switched back on via a control mechanism.
For double pump function (“Main/standby operation” mode), this also applies to the standby pump. If the time interval before pump cycling set in menu <5.8.1.2> expires, a pump kick takes place at the standby pump.

The “pump kick” function can be disabled via menu <5.8.1.1>. As soon as the pump is switched on via the control system, the countdown to the next pump kick is interrupted.

A pump kick lasts 5 seconds, during which time the motor turns at the set speed. The speed can be set between the minimum and maximum permissible pump speeds in menu <5.8.1.3>. Factory setting: minimum speed.

NOTICE

If the “Operation” function has been chosen for EBM/SBM, each pump kick produces a signal. The signal is visible for a few seconds each time.

NOTICE

In the event of a malfunction too, the system will also attempt to perform a pump kick.

The time remaining until the next pump kick can be seen on the display in menu <4.2.4.0>. This menu is only available when the motor is stopped. The number of pump kicks is shown in menu <4.2.6.0>. With the exception of warnings, all faults detected during a pump kick will cause the motor to be switched off. The corresponding error code is shown on the display.

6.5.2 Overload protection

The pumps are equipped with an electronic overload protection function which switches off the pump in the event of an overload.

The electronic modules are equipped with a non-fading memory for data storage purposes. The data is retained no matter how long the module is disconnected from the power supply. When the voltage supply is re-established, the pump continues to run with the default values prior to disconnection from the power supply.

6.5.3 Switching frequency

The switching frequency can be changed via menu <4.1.2.0>, the CAN bus or the IR-Stick.

NOTICE

At high ambient temperatures, the thermal load on the electronic module can be reduced by lowering the switching frequency. Carry out switchovers or changes only when the pump is at a standstill (not when the motor is running).

Lower switching frequencies result in increased noise levels.

6.6 Variants

If menu <5.7.2.0> “pressure value correction” is not available for a pump, the pump in question is a variant version.

In that case, the following functions are unavailable:

- Pressure value correction (menu <5.7.2.0>)
- Efficiency-optimised activation and deactivation in twin-head pumps
- Flow rate trend display

7 Installation

7.1 Personnel qualifications

- Installation/dismantling: The technician must be trained in the use of the necessary tools and fixation materials.

7.2 Operator responsibilities

- Observe national and regional regulations!
- Observe locally applicable accident prevention and safety regulations of professional and trade associations.
- Provide protective equipment and ensure that the protective equipment is worn by personnel.
- Observe all regulations for working with heavy loads.

7.3 Safety

DANGER

Risk of fatal injury due to lack of protective devices!

Due to missing protective devices of the electronic module or in the range of the coupling/motor, electric shock or contact with rotating parts can lead to life-threatening injuries.

- Before commissioning, safety devices such as such as electronic module covers or coupling covers that were removed must be reinstalled!

DANGER

Potentially fatal injury due to electronic module not being installed!

A life-threatening voltage may be present at the motor contacts! Normal operation of the pump is only permitted with the electronic module installed.

- Never connect or operate the pump without the electronic module mounted!

DANGER

Danger of death from falling parts!

The pump itself and pump parts can have a very high net weight. Falling parts pose a risk of cuts, crush injuries, bruises or impacts, which can be fatal.

- Always use suitable lifting accessories and secure parts against falling.
- Never stand below a suspended load.
- During storage and transport, as well as before all installation and assembly work, ensure that the pump is in a safe position and standing securely.

WARNING

Hot surface!

The entire pump can become very hot. There is a risk of burns!

- Allow the pump to cool down before commencing any work!

WARNING

Risk of scalding!

At high fluid temperatures and system pressures, allow the pump to cool down first and then depressurise the system.

CAUTION

Damage to the pump due to overheating!

The pump must not be allowed to run dry for more than 1 minute. Dry running causes a build-up of energy in the pump, which can damage the shaft, impeller, and mechanical seal.

- Make sure that the volume flow does not fall below the minimum value Q_{min}.

Approximate calculation of Q_{min}:

$Q_{min} = 10\ \% \times Q_{max\ pump} \times \text{actual speed} / \text{max. speed}$

7.4 Permitted installation positions and change of the arrangement of components before the installation

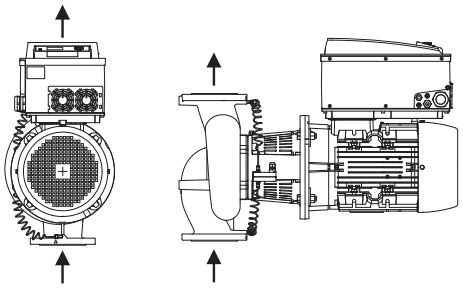

Fig. 13: Arrangement of the components upon delivery

The factory pre-installed component arrangement relative to the pump housing (see Fig. 13) can be changed on site if required. This may be necessary, for example, in the following cases:

- Ensuring pump venting
- Enabling better operation
- Avoid impermissible installation positions (motor and/or electronic module point downwards).

In most cases, it is enough to rotate the motor impeller unit relative to the pump housing. The possible arrangement of components is the result of the permitted installation positions.

7.4.1 Permitted installation positions with horizontal motor shaft

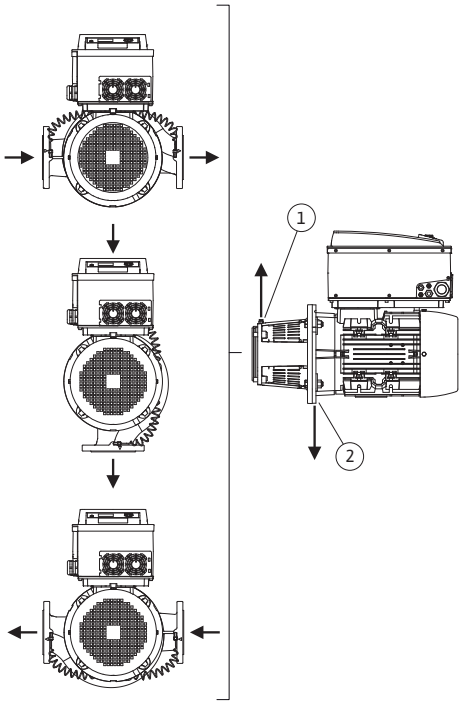

Fig. 14: Permitted installation positions with horizontal motor shaft

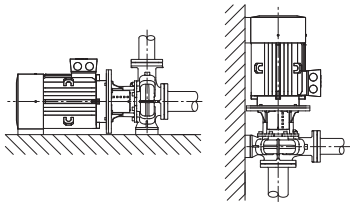

Fig. 15: Stratos GIGA B

The permissible installation positions for a horizontal motor shaft and electronic module pointing upward (0°) are shown in Fig. 14.

Any installation position is allowed except for “electronic module facing down” (-180°).

The pump vents optimally when the air vent valve points upward (Fig. 14, Item 1).
Discharge any condensate directly via the existing drilled holes, pump lantern and motor (Fig. 14, Item 2).
For this purpose, remove the plug on the motor flange.

Stratos GIGA/Stratos GIGA-D

NOTICE

The installation position with a horizontal motor shaft is only permissible for the Stratos GIGA/Stratos GIGA-D up to a motor power of 15 kW.
No motor support is required.
For a motor power of > 15 kW, only install with a vertical motor shaft.

Stratos GIGA B

NOTICE

Install monobloc pumps of the Stratos GIGA B series on a sufficient base or mounting brackets (Fig. 15).
Motors with a motor power of 18.5 kW and higher require a support. See installation examples.

For installations with a vertical motor position, the pump housing feet and motor housing feet must be screwed on. This must be done stress-free.

Unevenness between motor and pump housing feet must be levelled out for stress-free installation.

Stratos GIGA B installation examples:

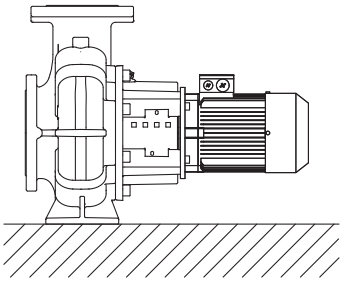

No support required

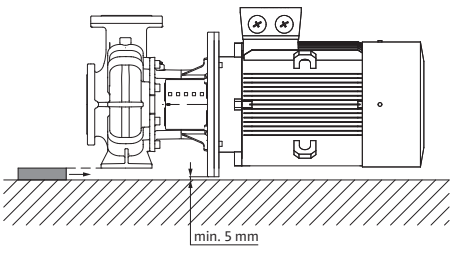

Pump housing supported

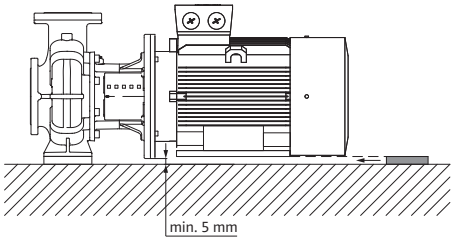

Motor supported

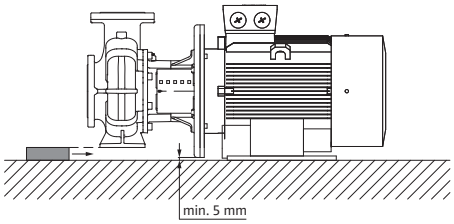

Pump housing supported, motor attached to the base

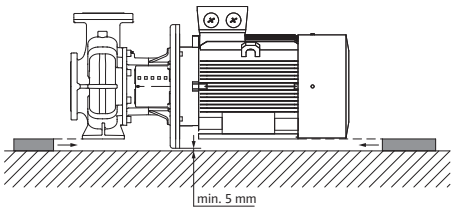

Pump housing and motor supported

Example of a foundation screwed connection

- Align the complete unit when installing it on the foundation with the help of the spirit level (at the shaft/discharge port).
- Always place shims (B) on the left and right adjacent to fasteners (e.g. stone screws (A)) between the baseplate (E) and base (D).
- Evenly and firmly tighten the fixation material.
- For distances > 0.75 m, support the baseplate at the centre between the fixation elements.

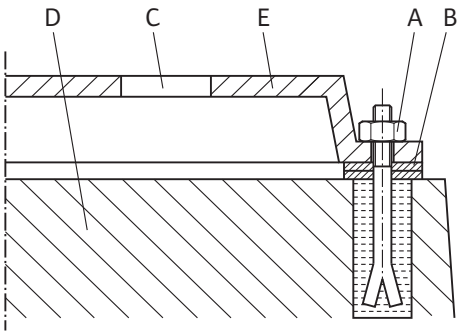

Fig. 16: Example of a foundation screwed connection

7.4.2 Permitted installation positions with vertical motor shaft

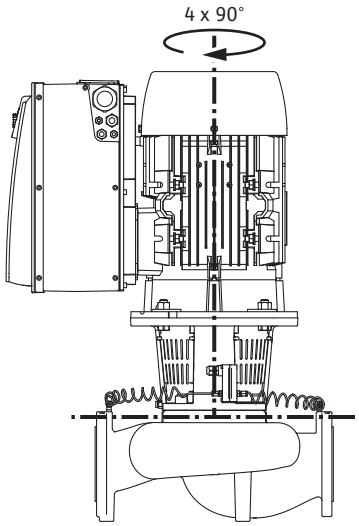

Fig. 17: Permitted installation positions with vertical motor shaft

The permissible installation positions with a vertical motor shaft are shown in Fig. 17.

All installation positions except for “motor facing down” are allowed.

Discharge any condensate via the existing holes, pump lantern and motor.
For this purpose, remove the plug on the motor flange.

The motor impeller unit can be arranged in four different positions relative to the pump housing (each offset by 90°).

7.4.3 Turn of motor impeller unit

The motor impeller unit consists of an impeller, lantern and motor with electronic module.

Turn of motor impeller unit relative to pump housing

NOTICE

To make the installation work easier, it can be helpful to install the pump in the piping. Do not connect the pump electrically or fill the pump or system.

For installation steps, see section “Replacing the mechanical seal”.

1. Rotate the motor impeller unit by 90° or 180° in the desired direction and install the pump in reverse order.
2. Secure the differential pressure sensor mounting bracket with one of the screws on the side opposite the electronic module. The position of the differential pressure sensor relative to the electronic module does not change.
3. Wet the O-ring (Fig. I/II/III, Item 1.14) well before installation (do not install the O-ring when it is dry).

NOTICE

Always make sure that the O-ring (Fig. I/II/III, Item 1.14) is not twisted or squeezed during installation.

4. Before commissioning, fill the pump/system and supply it with the system pressure, then check impermeability. In the event of a leakage at the O-ring, air will first escape from the pump. The leakage can be checked with a leakage spray at the gap between the pump housing and the lantern, for example, as well as at their screwed connections.
5. In the event of continual leakage, use a new O-ring, if need be.

CAUTION

Material damage due to bent or kinked pressure sensing lines.

Improper handling can damage the pressure sensing line.

When turning the motor impeller unit, do not bend or kink pressure sensing lines.

6. When reinstalling the differential pressure sensor, bend the pressure sensing lines as little as possible and evenly into a suitable position. When doing this, do not deform the areas at the clamp boltings.

CAUTION

Damage due to incorrect handling!

Not screwing the screws in properly can lead to sluggishness of the shaft.

While screwing in the screws, check the rotatability of the shaft with a socket wrench on the fan wheel of the motor. If necessary, loosen the screws again and tighten them evenly crosswise.

NOTICE

If the differential pressure sensor is turned, do not interchange the discharge and suction sides on the differential pressure sensor!

For additional information on the differential pressure sensor, see section “Electrical connection”.

7.5 Preparing the installation

Check whether the pump complies with the specifications on the delivery note; report any damage or missing parts to Wilo immediately. Check slatted crates/boxes/wrapping for spare parts or accessories that could be included with the pump.

WARNING

Risk of personal injury and property damage due to improper handling!

- Install only after completion of all welding and soldering work and after the pipeline system has been flushed, if required.
  – Dirt can cause the pump to fail.

Installation location

- The pump must be protected from the weather and installed in a frost-/dust-free, well ventilated, oscillation-isolated environment that is not potentially explosive. The pump must not be installed outdoors! Observe the specifications in “Intended use” section!
- Mount the pump in a readily accessible place. This makes it easier to complete inspections, maintenance (e.g. mechanical seal change) or replacement in the future. Observe the minimum axial distance between the wall and the fan cover of the motor: free removal dimension of at least 200 mm + diameter of the fan cover.
- Install a device for attaching hoisting gear above the set-up site of the pumps. Total weight of the pump: see catalogue or data sheet.

Base

CAUTION

A faulty foundation or incorrect installation of the unit!

A faulty foundation or incorrect installation of the unit on the foundation can lead to defects of the pump.

• These defects are not covered by the warranty.

• Never set up the pump unit on unfortified surfaces or surfaces that cannot bear loads.

NOTICE

For vibration-isolated installations, some pump types require simultaneous separation of the base block itself from the building structure by means of an elastic intermediate layer (e.g. cork or Mafund plate).

WARNING

Personal injury and property damage due to improper handling!

Transport lugs mounted on the motor housing can tear out if the load is too heavy. This can lead to serious injuries and damage to the product!

- Only lift the pump with approved lifting gear (e.g. block and tackle, crane). See also chapter “Transport and storage”.
- Transport lugs mounted on the motor housing are only permitted for transporting the motor!

NOTICE

Simplify subsequent work on the unit!

- To ensure the entire unit does not have to be emptied, install shut-off valves upstream and downstream of the pump.

If need be, the necessary non-return valves are to be provided.

Connection of the pipes

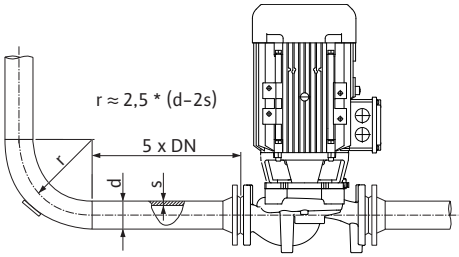

Fig. 18: Settling section upstream and downstream of the pump

CAUTION

Risk of damage due to incorrect handling!

The pump may never be used as a fixed point for the pipe.

NOTICE

Avoid flow cavitation!

- A settling section must be provided upstream and downstream of the pump in the form of a straight pipe. The length of the settling section must be at least 5 times the nominal diameter of the pump flange.

- Remove the flange covers at the suction and discharge ports of the pump before attaching the piping.
- The present NPSH of the system always has to be greater than the required NPSH of the pump.
- The forces and torques exerted by the piping system on the pump flanges (e.g. due to torsion, thermal expansion) must not exceed the permissible forces and torques.
- The pipes and pump must be free of mechanical stress when installed.
- The pipes must be fixed in such a way that the pump does not have to support the weight of the pipes.
- The suction line is to be kept as short as possible. Lay the suction line to the pump so that it continuously rises while the inlet falls. Avoid possible air entry points.
- If a dirt trap in the suction line is required, its free cross-section has to be 3 – 4 times the cross-section of the pipe.
- For short pipes, the nominal diameters must be at least those of the pump connections. For long pipes, determine the most economical nominal diameter in each case.
- To avoid higher pressure losses, make adapters for larger nominal diameters with an extension angle of approx. 8.
- Leakages at the clamping ring screw connection may be due to transport (e.g. settling behaviour) and handling of the pump (rotating the drive, fitting insulation). Turning the clamping ring screw connection by another 1/4 turn resolves the leakage.
  If the leakage persists after this 1/4 turn, do not turn any further, but replace the screwed connection.

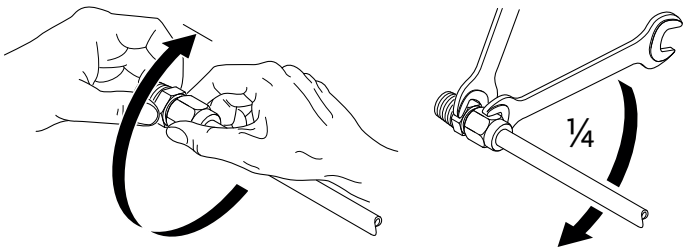

Fig. 19: Further turning the clamping ring screw connection by a 1/4 turn

Final check

Check the alignment of the unit again according to the “Installation” section.

- Tighten the foundation bolts if necessary.
- Check all connections for correctness and function.
- It must be possible to turn the coupling/shaft by hand.

Do not allow the coupling/shaft to turn:

- Release the coupling and re-tighten with the prescribed torque.

In case this measure is not successful:

- Remove the motor (see “Changing the motor” section).
- Clean the motor centring and flange.
- Reinstall the motor.

7.5.1 Permissible forces and torques on the pump flanges

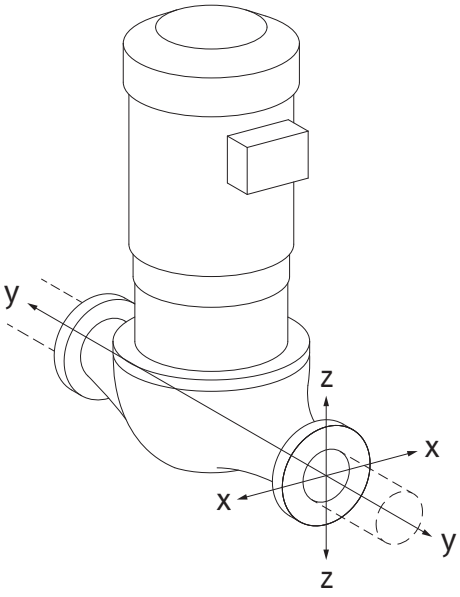

Fig. 20: Load case 16A, EN ISO 5199, Appendix B

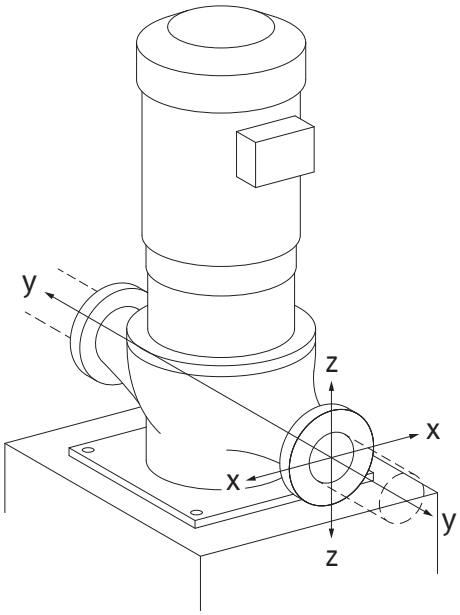

Fig. 21: Load case 17A, EN ISO 5199, Appendix B

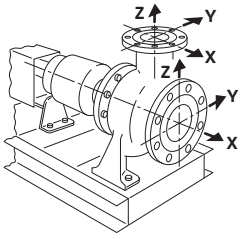

Fig. 22: Load case 1A

Pump suspended in pipe, case 16A (Fig. 20)

DN	Forces F [N]				Torques M [Nm]			
	F_X	F_Y	F_Z	Σ Forces F	M_X	M_Y	M_Z	Σ Torques M
Pressure and suction flange								
32	450	525	425	825	550	375	425	800
40	550	625	500	975	650	450	525	950
50	750	825	675	1300	700	500	575	1025
65	925	1050	850	1650	750	550	600	1100
80	1125	1250	1025	1975	800	575	650	1175
100	1500	1675	1350	2625	875	625	725	1300
125	1775	1975	1600	3100	1050	750	950	1525
150	2250	2500	2025	3925	1250	875	1025	1825
200	3000	3350	2700	5225	1625	1150	1325	2400
250	3725	4175	3375	6525	2225	1575	1825	3275

Values in acc. with ISO/DIN 5199 – class II (2002) – Appendix B

Table 4: Permissible forces and torques on pump flanges in vertical pipe

Vertical pump on pump feet, case 17A (Fig. 21)

DN	Forces F [N]				Torques M [Nm]			
	F_X	F_Y	F_Z	Σ Forces F	M_X	M_Y	M_Z	Σ Torques M
Pressure and suction flange								
32	338	394	319	619	300	125	175	550
40	413	469	375	731	400	200	275	700
50	563	619	506	975	450	250	325	775
65	694	788	638	1238	500	300	350	850
80	844	938	769	1481	550	325	400	925
100	1125	1256	1013	1969	625	375	475	1050
125	1331	1481	1200	2325	800	500	700	1275
150	1688	1875	1519	2944	1000	625	775	1575
200	2250	2513	2025	3919	1375	900	1075	2150
250	2794	3131	2531	4894	1975	1325	1575	3025

Values in acc. with ISO/DIN 5199 – class II (2002) – Appendix B

Table 5: Permissible forces and torques on pump flanges in horizontal pipe

Horizontal pump, axial connector x-axis, case 1A

DN	Forces F [N]				Torques M [Nm]			
	F_X	F_Y	F_Z	Σ Forces F	M_X	M_Y	M_Z	Σ Torques M
Suction flange								
50	578	525	473	910	490	350	403	718
65	735	648	595	1155	525	385	420	770
80	875	788	718	1383	560	403	455	823
100	1173	1050	945	1838	613	438	508	910
125	1383	1243	1120	2170	735	525	665	1068
150	1750	1575	1418	2748	875	613	718	1278
200	2345	2100	1890	3658	1138	805	928	1680

DN	Forces F [N]				Torques M [Nm]			
	F_X	F_Y	F_Z	Σ Forces F	M_X	M_Y	M_Z	Σ Torques M
Values in acc. with ISO/DIN 5199 – class II (2002) – Appendix B								

Table 6: Permissible forces and torques on pump flanges

Horizontal pump, top connector z-axis, case 1A

DN	Forces F [N]				Torques M [Nm]			
	F_X	F_Y	F_Z	Σ Forces F	M_X	M_Y	M_Z	Σ Torques M
Discharge flange								
32	315	298	368	578	385	263	298	560
40	385	350	438	683	455	315	368	665
50	525	473	578	910	490	350	403	718
65	648	595	735	1155	525	385	420	770
80	788	718	875	1383	560	403	455	823
100	1050	945	1173	1838	613	438	508	910
125	1243	1120	1383	2170	735	525	665	1068
150	1575	1418	1750	2748	875	613	718	1278
Values in acc. with ISO/DIN 5199 – class II (2002) – Appendix B								

Table 7: Permissible forces and torques on pump flanges

If not all working loads reach the maximum permitted values, one of these loads may exceed the normal limit value. Provided that the following additional conditions are fulfilled:

- All force and torque components are limited to 1.4 times the maximum permitted value.
- The forces and torques acting on each flange meet the requirements of the compensation equation.

$$\left(\frac{\sum|F|_{\text{effective}}}{\sum|F|_{\text{max. permitted}}}\right)^2 + \left(\frac{\sum|M|_{\text{effective}}}{\sum|M|_{\text{max. permitted}}}\right)^2 \leq 2$$

Fig. 23: Compensation equation

$\Sigma F_{effective}$ and $\Sigma M_{effective}$ are the arithmetic sums of the effective values of both pump flanges (inlet and outlet). $\Sigma F_{max.\ permitted}$ and $\Sigma M_{max.\ permitted}$ are the arithmetic sums of the maximum permitted values of both pump flanges (inlet and outlet). The algebraic signs of Σ F and Σ M are not taken into consideration in the compensation equation.

Influence of material and temperature

The maximum permissible forces and torques apply for the grey cast iron base material and for an initial temperature value of 20 °C.
For higher temperatures, the values must be corrected as follows depending on the ratio of their modulus of elasticity:

$E_{t,\ EN-GJL} / E_{20,\ EN-GJL}$

$E_{t,\ EN-GJL}$ = Modulus of elasticity grey cast iron at the selected temperature

$E_{20,\ EN-GJL}$ = Modulus of elasticity grey cast iron at 20 °C

7.5.2 Condensate drainage/Insulation

When using the pump in air conditioning or cooling systems:

- The condensate that forms in the lantern can be drained specifically via an existing drilled hole. A drain pipe can also be connected to this opening and a small amount of escaping liquid can be drained off.
- The motors are equipped with condensation water holes which are closed with a rubber plug at the factory. The rubber plug is used to guarantee that protection class IP55 is fulfilled.
- Installation position:
  All installation positions except for “motor facing down” are allowed.
- The air vent valve (Fig. I/II/III, Item 1.31) must always point upward.

CAUTION

If the rubber plug is removed, protection class IP55 is no longer ensured!

NOTICE

In the case of insulated systems only the pump housing may be insulated as a rule, but not the lantern, drive or differential pressure sensor.

In case of very strong condensation and/or ice formation, any surfaces of the lantern which are very wet with condensate can also be insulated additionally (direct insulation of individual surfaces). Ensure that the condensate drains out of the hole in the lantern.
If service is necessary, the dismantling of the lantern must not be obstructed. The following components must always be freely accessible:

- Air vent valve
- Coupling
- Coupling guard

Observe DIN EN 12828. When using insulation materials, pay attention to material compatibility. Ammonia compounds can cause stress corrosion cracking on brass materials (e.g. differential pressure sensor, air vent valve). Avoid direct contact with brass materials.

8 Electrical connection

DANGER

Danger of death due to electrical current!

Improper conduct when carrying out electrical work can lead to death due to electric shock!

- Electrical connection may only be carried out by a qualified electrician and in accordance with the applicable regulations!
- Adhere to accident prevention regulations!
- Before beginning work on the product, make sure that the pump and drive are electrically isolated.
- Make sure that no one can turn on the power supply again before work is completed.
- Make sure that all energy sources can be isolated and locked. If the pump was switched off by a safety device, it must be secured against switching back on again until the error has been remedied.
- Electrical machines must always be earthed. Earthing must be appropriate for the drive and meet the relevant standards and regulations. Earth terminals and fixation elements must be suitably dimensioned.
- Connection cables must **never** touch the piping, pump or motor housing.
- If it is possible for persons to come into contact with the pump or the pumped fluid, the earthed connection must also be fitted with a residual current circuit breaker.
- Observe the installation and operating instructions for the accessories!



DANGER

Risk of fatal injury due to contact voltage!
Even when enabled, high contact voltages can still be present in the electronic module due to undischarged capacitors. Therefore, work on the electronic module must not be started until 5 minutes have elapsed!

Touching live parts will result in serious injuries or death!

- Before working on the pump, disconnect all poles of the supply voltage and secure against being switched on again! Wait 5 minutes.
- Check whether all connections (including potential-free contacts) are voltage-free!
- Never insert objects (e.g. nail, screwdriver, wire) into openings on the electronic module!
- Reinstall removed safety devices (such as module covers)!



WARNING

Risk of mains overload! An inadequate mains design can lead to system failures and cable fires due to mains overload.

Short-term simultaneous operation of all pumps is possible in multi-pump operation.
Take multi-pump operation into account when designing the network, especially with regard to the cable cross-sections and fuses used. Each drive must have its own supply line with separate fuse protection!



DANGER

Risk of fatal electrical shock! Generator or turbine operation during pump flow!

Even without the electronic module (without electrical connection), there may be dangerous contact voltage at the motor contacts!

- Check for absence of voltage and cover or cordon off adjacent live parts!
- Close the shut-off devices upstream and downstream of the pump!



DANGER

Potentially fatal injury due to electronic module not being installed!

A life-threatening voltage may be present at the motor contacts!
Normal operation of the pump is only permitted with the electronic module installed.

- Never connect or operate the pump without the electronic module mounted!

CAUTION

Danger of material damage caused by improper electrical connection!

- Ensure that the current type and voltage of the mains connection correspond to the specifications on the pump rating plate.

8.1 Fuse on mains side

The fuse protection on mains side must always match the electrical design of the pump!

Comply with the regulations of the local energy supply company!

Maximum permissible fuse protection, see following table; observe the rating plate data!

Power P_N	Max. fuse [A]
11 kW	25
15 kW	35
18.5 ... 22 kW	50

Table 8: Maximum permissible fuse protection

Circuit breaker

The use of a circuit breaker is recommended.

NOTICE

Circuit breaker trigger characteristic: B

Overload: 1.13 – 1.45 x I_{nom}

Short-circuit: 3 – 5 x I_{nom}

Residual-current device (RCD)

This pump is equipped with a frequency converter. Therefore, it must not be protected by a residual-current device. Frequency converters can impair the function of residual-current-operated protection circuits.

Exception: Residual-current devices which have a selective type B universal-current-sensitive version are allowed:

- Labelling: 
- Trigger current: > 300 mA

8.2 Requirements and limit values for harmonic currents

All pumps of this series are intended for professional use. When connected to the low-voltage mains, the following standards apply:

- IEC 61000-3-2 for devices with a phase current ≤ 16 A
- IEC 61000-3-12 for devices with a phase current between 16 A and 75 A

Pumps in efficiency classes 11 ... 22 kW are subject to special connection conditions because an R_{SCE} of 33 at the connection point is not sufficient for their operation. The pumps have been assessed based on table 4 of the standard ("three-phase devices under special conditions").

For all public connection points, the short-circuit power S_{SC} at the interface between the user's electrical installation and the mains must be greater than or equal to the values specified in the table. It is the responsibility of the installer or the user, with the assistance of the grid operator if necessary, to ensure that such pumps are operated properly. If the pumps are used industrially on a factory medium voltage feeder, the connection conditions are solely the operator's responsibility.

Motor power [kW]	Short-circuit power S_{SC} [kVA]
11	≥ 1800
15	≥ 2400
18.5	≥ 3000
22	≥ 3500

Table 9: Required short-circuit power S_{SC}

NOTICE

A suitable harmonic filter between the pump and supply network reduces the amount of harmonic current.

8.3 Preparing the electrical connection

Establish electrical connection using a fixed mains connection cable. The mains cable must have a plug device or an all-pole switch with a contact opening width of at least 3 mm.

If flexible cables are used, e.g. mains connection cables or communication cables, use ferrules.

Always lead the mains connection cable through the designated threaded cable gland M40!

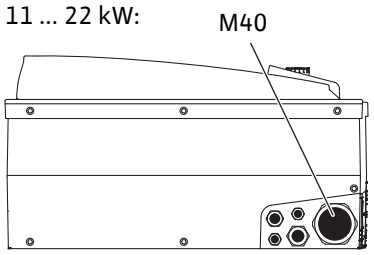

Fig. 24: Threaded cable glands for mains connection cable

Power P_N [kW]	Cable cross-section [mm²]	PE [mm²]
11	4 ... 6	6 ... 35
15	6 ... 10	
18.5 ... 22	10 ... 16	

Table 10: Cable cross-sections

NOTICE

Tightening torques for the terminal screws, see “Tightening torques for threaded cable glands” table.

Only use a calibrated torque wrench.

In order to comply with electromagnetic compatibility standards, the following cables must always be shielded:

- Differential pressure sensor (DPS) (if installed on-site)
- In2 (setpoint)
- DP communication for cable lengths > 1 m (DP = twin-head pump; “MP” terminal)
  Observe polarity:
  MA = L => SL = L
  MA = H => SL = H
- EXT. Off
- AUX
- Communication cable IF module

The shield must be applied to the EMC cable clips in the electronic module **and** to the other end. The cables for SBM and SSM do not have to be shielded.

Connect shield in/on electronic module

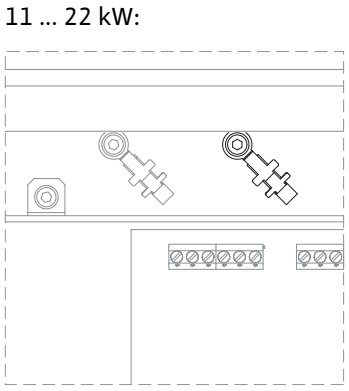

Fig. 25: Connect shield

- With a motor power of ≥ 11 kW: on the cable terminals above the terminal strip

In order to ensure drip protection and strain relief on the cable connections, only cables with a suitable outer diameter may be used (for the required cross-section, please see the “Cable cross-sections” table).

Secure cable glands tightly.

Ensure that no drips can run into the electronic module:

- Bend the cables into a drain loop near the threaded cable gland
- Unused cable glands should be sealed with the sealing washers provided and screwed tight.

The mains cable should be laid in such a way that it can under no circumstances come into contact with the pipe and/or the pump and motor housing. When pumps are used with fluid temperatures above 90°C, a mains cable with suitable thermal resistance must be used.

Note additional earthing!

Tightening torques for union nuts of the threaded cable glands

Thread	Tightening torque [Nm] ± 10 %	Installation information
M12x1.5	3.0	1x threaded cable gland M12 reserved for connecting cable for an optional differential pressure sensor
M16x1.5	6.0	
M20x1.5	8.0	
M25x1.5	11.0	
M40x1.5	16.0	

Table 11: Tightening torques for threaded cable glands

8.4 Terminals

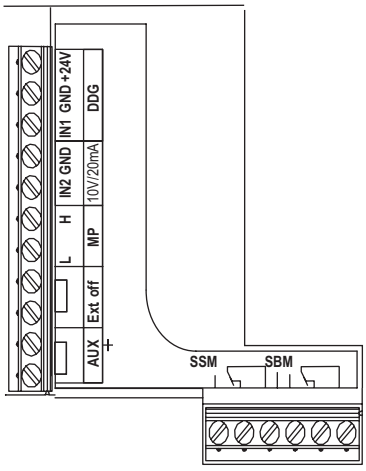

Fig. 26: Control terminals

Control terminals

Please also see the following “Terminal assignment” table.

Power terminals (mains connection terminals)

11 ... 22 kW:

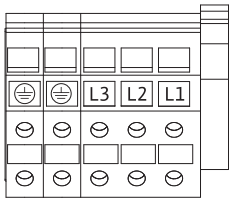

Fig. 27: Power terminals

Please also see the following “Terminal assignment” table.

Additional earthing



DANGER

Danger of death due to electrical current!

As motors from 11 kW generate more leakage current, improper electrical connections can lead to fatal electric shock!

- Motors from 11 kW must be additionally connected to a reinforced earth connection.

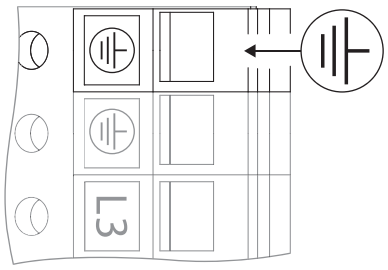

Fig. 28: Additional earthing, from 11 kW motor power

	Tightening torque [Nm] ± 10 %
Control terminals	0.5
Power terminals	1.3
Earth terminals	0.5

Table 12: Tightening torques for control, power and earth terminals

8.5 Terminal assignment

11 … 22 kW:

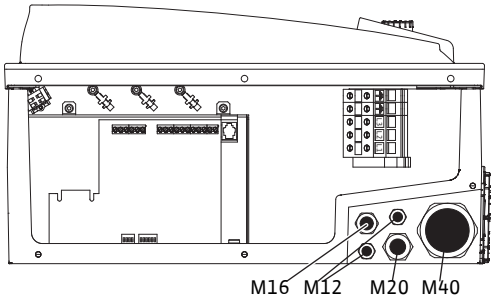

Fig. 29: Threaded cable connections

Name	Assignment	Notices
L1, L2, L3	Mains connection voltage	3~380 V AC – 3~440 V AC, 50/60 Hz, IEC 38
⏚ (PE)	Protective earth conductor	
In1 *(1)* (input)	Actual value input	Type of signal: Voltage (0 … 10 V, 2 … 10 V) Input resistance: $R_i \geq 10$ kΩ Type of signal: Current (0 … 20 mA, 4 … 20 mA) Input resistance: $R_i = 500$ Ω Can be configured in the service menu <5.3.0.0> Connected at the factory via the M12 threaded cable gland, via *In1 (1)*, *GND (2)*, *+ 24 V (3)* according to the sensor cable names (1, 2, 3).
In2 (input)	Setpoint input	In2 can be used as input for remote setpoint adjustment in any operating mode. Type of signal: Voltage (0 … 10 V, 2 … 10 V) Input resistance: $R_i \geq 10$ kΩ Type of signal: Current (0 … 20 mA, 4 … 20 mA) Input resistance: $R_i = 500$ Ω Can be configured in the service menu <5.4.0.0>
GND *(2)*	Earth connections	For both input In1 and In2
+24 V *(3)* (output)	DC voltage for external consumer / signal transmitter	Load: max. 60 mA The voltage is short-circuit proof. Contact load: 24 V DC / 10 mA
AUX	External pump cycling	Pump cycling can be performed using an external, potential-free contact. If external pump cycling was activated previously, a single bypass of the two terminals will perform a pump cycling. Rebypassing repeats this process while maintaining the minimum runtime. Parameterisable in service menu <5.1.3.2> Contact load: 24 V DC/10 mA
MP	Multi Pump	Interface for twin-head pump function
Ext. Off	Control input “Overriding OFF” for external, potential-free switch	The pump can be switched on/off via the external potential-free contact. In systems with higher switching frequency (> 20 switch-ons/switch-offs per day) switch-off via “External off”. Parameterisable in service menu <5.1.7.0> Contact load: 24 V DC/10 mA

Name	Assignment	Notices
SBM	Individual run signal/collective run signal, readiness signal and mains On signal	Potential-free individual run signal/collective run signal (changeover contact), operation readiness signal is available at the SBM terminals (menus <5.1.6.0>, <5.7.6.0>). Contact load: minimum permissible: 12 V DC / 10 mA, maximum permissible: 250 V AC / 24 V DC, 1 A
SSM	Individual/collective fault signal	Potential-free single/collective fault signal (changeover contact) is available at the SSM terminals (menu <5.1.5.0>). Contact load: minimum permissible: 12 V DC / 10 mA, maximum permissible: 250 V AC / 24 V DC, 1 A
IF module interface	Terminals for serial, digital building automation interface	The optional IF module is pushed into a multi-plug in the terminal box. The connection is twist proof.

Table 13: Terminal assignment

NOTICE

The terminals In1, In2, AUX, GND, Ext. off and MP meet the EN 61800-5-1 "safe isolation" requirement
– to the mains terminals
– and to the terminals SBM and SSM (and vice versa).

The control features a PELV (protective extra low voltage) circuit design. This means that the (internal) supply meets the supply requirements for safe isolation, the GND is connected to protective earth (PE).

8.6 Differential pressure sensor connection

Stratos GIGA/-D

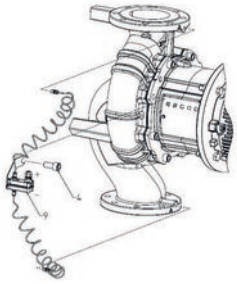

Stratos GIGA B

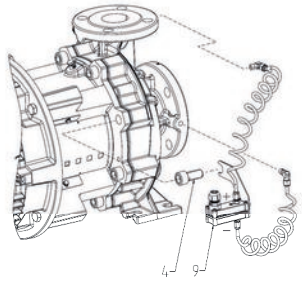

Table 14: Differential pressure sensor connection

Cable	Colour	Terminal	Function
1	Black	In1	Signal
2	Blue	GND	Earth
3	Brown	+24 V	+24 V

Table 15: Connection; differential pressure sensor cable

NOTICE

Guide the electrical connection for the differential pressure sensor through the smallest threaded cable gland (M12) on the electronic module.

For a twin-head pump or Y-pipe installation, connect the differential pressure sensor to the main pump. The measuring points of the differential pressure sensor must be arranged in the collector pipe on the suction and discharge side of the twin-head pump system.

8.7 Making the electrical connection

- Make the connections in accordance with the terminal allocation.
- Earth the pump/installation as per regulations.
- **Reinstall any uninstalled safety devices, e.g. module cover!**

9 Protective devices



WARNING

Risk of burns from hot surfaces!

Pump housing and lantern can get hot during operation and cause burns when touched.

- Provide an appropriate guard.
- Allow the pump to cool down before commencing any work.
- Depending on the application, insulate the pump housing.
- Observe local regulations.

10 Commissioning



DANGER

Danger of death due to lack of protective devices!

Due to missing protective devices of the electronic module or in the range of the coupling/motor, electric shock or contact with rotating parts can lead to life-threatening injuries.

- Before commissioning, protection devices such as electronic module covers or coupling covers that were removed must be reinstalled!
- Always wear protective clothing, safety gloves and safety glasses when working!
- An authorised technician must check the functionality of the safety devices on the pump, motor and electronic module prior to commissioning!
- Never connect the pump without the electronic module!

CAUTION

Risk of material damage due to unsuitable operating mode!

Operating outside of the duty point impairs the pump efficiency and can damage the pump. Operating with the shut-off devices closed for more than 5 minutes is not recommended and generally dangerous in the case of hot fluids.

- The pump must not be operated outside of the specified operating range.
- Do not operate the pump with the shut-off devices closed.
- Make sure that the NPSHA value is always higher than the NPSHR value.



WARNING

Danger of injury due to fluid shooting out and components coming loose!

Not installing the pump/system correctly can lead to serious injuries during commissioning!

- Carry out all work carefully!
- Keep a safe distance during commissioning!
- Always wear protective clothing, safety gloves and safety glasses when working.

CAUTION

Risk of material damage due to the formation of condensate!

When using the pump in air-conditioning or cooling applications, the formation of condensate can cause motor damage. The motors are equipped with condensate drainage holes, which are factory-sealed with plastic plugs.

- Open the condensate drainage holes in the motor housing at regular intervals and drain the condensate.
- Then reseal the condensate drainage holes with plastic plugs.

CAUTION

If the rubber plug is removed, protection class IP55 is no longer ensured!

10.1 Personnel qualifications

- Electrical work: a qualified electrician must carry out the electrical work.
- Installation/dismantling: The technician must be trained in the use of the necessary tools and fixation materials.
- The product must be operated by persons who have been instructed on how the complete system functions.

10.2 Filling and venting

CAUTION

Dry running will destroy the mechanical seal! It may cause leakage.

- Ensure that a dry run of the pump is not possible.



WARNING

There is a risk of burns or freezing upon coming into contact with the pump/system.

Depending on the pump and system operating conditions (fluid temperature), the entire pump can become very hot or very cold.

- Keep a safe distance during operation!
- Allow the system and pump to cool down to room temperature!
- Always wear protective clothing, safety gloves and safety glasses when working.



DANGER

Danger of personal injury and material damage due to extremely hot or extremely cold pressurised fluid!

Depending on the temperature of the fluid, when the venting device is opened completely, **extremely hot** or **extremely cold** fluid may escape in liquid or vapour form. Fluid may shoot out at high pressure depending on the system pressure.

- Always exercise caution when opening the venting device.
- Protect the electronic module from any water escaping when venting.

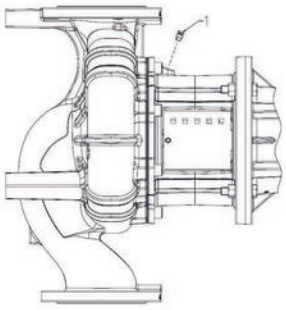

Fig. 30: Air vent valve

Fill and vent the system correctly.

1. To do this, loosen the air vent valves and vent the pump.
2. After venting the pump, tighten the air vent valves again so that no more water can escape.

NOTICE

- Always keep to the minimum pressure!

- To avoid cavitation noises and damage, a minimum inlet pressure must be guaranteed at the suction port of the pump. The minimum inlet pressure depends on the operating situation and the pump's duty point. Accordingly, the minimum pressure must be determined.
- The main parameters for defining the minimum inlet pressure are the NPSH value of the pump at its duty point and the vapour pressure of the fluid. The NPSH value can be found in the technical documentation of the respective pump type.

NOTICE

When pumping from an open tank (e.g. cooling tower), ensure that there is always a sufficient liquid level above the pump's suction port. This prevents the pump from running dry. The minimum inlet pressure must be observed.

10.3 Twin-head pump installation/Y-pipe installation

NOTICE

For a two-pump system, the left-hand pump in the direction of flow is already factory-configured as the master pump.

NOTICE

For the initial commissioning of a Y-pipe installation that has not been preconfigured, both pumps are set to their factory setting. After connecting the twin-head pump communication cable, the error code "E035" is displayed. Both drives run at the emergency operation speed.

On acknowledgement of the error message, menu <5.1.2.0> is displayed and "MA" (= main pump) flashes. To acknowledge "MA", access disable must be deactivated and the service mode must be active. Both pumps are set to "Main pump" and "MA" flashes on the displays of both electronic modules.

- Confirm one of the two pumps as the main pump by pressing the control knob. The display on the main pump shows the status "MA".
- Connect the differential pressure sensor at the main pump.

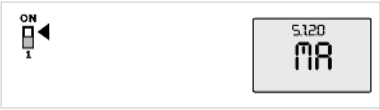

Fig. 31: Setting to main pump

The measuring points of the differential pressure sensor must be on the suction and discharge side of the two-pump system in the corresponding collector pipe. The other pump shows the status "SL" (= standby pump = partner pump). From now on, all further pump settings can only be made via the main pump.

NOTICE

To manually change the main pump later, open menu <5.1.2.0> (for help navigating the service menu, see section "Navigation").

10.4 Setting of pump output

The system was designed for a certain duty point (full load point, calculated maximum heating or cooling power demand). During commissioning, the pump output (delivery head) is set according to the duty point of the system.

The factory setting does not correspond to the output required for the system. The required pump capacity is determined with the help of the pump curve diagram for the selected pump type (e.g. from the data sheet).

NOTICE

The flow value shown on the IR Stick's display or that is output to the building management system must not be used to control the pump. This value is merely an indicator of general trends.

A flow value is not output on every pump type.

CAUTION

Risk of material damage!

An inadequate volume flow can lead to damage on the mechanical seal; the minimum volume flow depends on the speed of the pump.

- Make sure that the volume flow does not fall below the minimum value Q_{min}.

Approximate calculation of Q_{min}:

$Q_{min} = 10\ \% \times Q_{max\ pump} \times$ actual speed / max. speed

10.5 Switching on the pump

CAUTION

Risk of property damage!

- Do not operate the pump with the shut-off devices closed.
- Only operate the pump within the permissible operating range.

Once all preparatory work has been properly completed and all necessary precautionary measures have been taken, the pump is ready to start.

Before starting up the pump, check whether:

- Filling and venting lines are closed.
- All protective devices (coupling guard, module cover etc.) are correctly attached and tightened.
- All blind flanges are removed.
- The shut-off device on the suction side of the pump is completely opened.
- The shut-off device in the pressure pipe of the pump is completely closed or only slightly opened.

NOTICE

It is recommended to attach a flow meter to determine the exact pump delivery rate.

DANGER

Risk of fatal injury due to lack of protective devices!

Due to missing protective devices of the terminal box or in the range of the coupling/motor, electric shock or contact with rotating parts can lead to life-threatening injuries.

- Immediately after the conclusion of all work, all the provided safety and protection equipment items must be properly installed and put into operation!

- Switch on the pump: Restore power supply.
- After reaching the speed, slowly open the shut-off device in the pressure pipe and adjust the pump to the duty point.
- While the pump is starting, vent completely via the venting device.

CAUTION

Risk of material damage!

If abnormal noises, vibrations, temperatures or leakages occur when starting up:

- Switch the pump off immediately and remedy the cause.

During the running-in period and normal operation of the pump, a small amount of leakage, i.e. a few drops, is normal. A visual inspection is required from time to time. If there is clearly detectable leakage, the gasket must be replaced.

10.6 Behaviour after being switched on

During initial commissioning, the pump will work with the factory settings.

- The service menu is used for individual adjustment and re-setting of the pump; see section “Operation”.
- To correct faults, also see section “Faults, causes and remedies”.
- For additional information about the factory settings, see section “Factory settings”.

CAUTION

Risk of material damage! Incorrect settings for the differential pressure sensor can cause malfunctions!

Observe the recommended default values for the DPS used (for input In1).

10.7 Operation



NOTICE

The pump must always run smoothly and vibration-free and must not be operated in conditions other than those specified in the catalogue/data sheet.



DANGER

Danger of death due to lack of protective devices!

Due to missing protective devices of the terminal box or near the coupling/motor, electric shock or contact with rotating parts can lead to life-threatening injuries.

- Immediately after the conclusion of all work, all the provided safety and protection equipment items must be properly installed and put into operation!



WARNING

There is a risk of burns or freezing upon coming into contact with the pump/system.

Depending on the pump and system operating conditions (fluid temperature), the entire pump can become very hot or very cold.

- Keep a safe distance during operation!
- Allow the system and pump to cool down to room temperature!
- Always wear protective clothing, safety gloves and safety glasses when working.

There are a few ways to switch the pump on and off, depending on the different operating conditions and the degree of automation in the installation. Observe the following points:

Stop procedure:

- Prevent return flow to the pump.
- Do not operate for too long with the volume flow being too low.

Start procedure:

- Make sure that the pump is completely filled up.
- Do not operate for too long with the volume flow being too low.
- Larger pumps require a minimum flow rate amount to operate properly.
- Operating against a closed shut-off device can lead to overheating in the centrifugal chamber and to damage of the shaft seal.
- Ensure a continual flow to the pump with a sufficiently large NPSH.
- Prevent insufficient counter pressure leading to a motor overload.
- To avoid significant increases in motor temperature and excessive load on the pump, coupling, motor, gaskets and bearings, perform no more than 10 switch-on procedures per hour.

Twin-head pump operation

To ensure the standby pump is ready for operation, operate the standby pump every 24 h at least once a week. See also section “Twin-head pump operation behaviour” and section “Pump kick”.

10.8 Setting the control mode

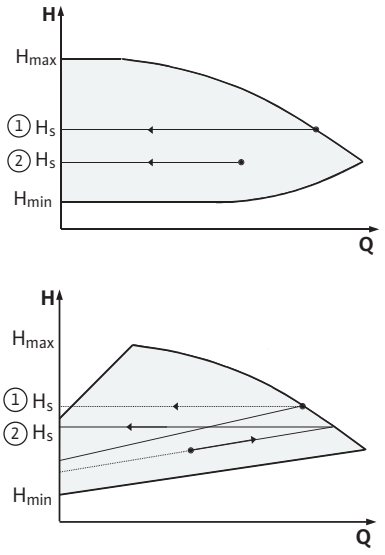

Fig. 32: Δp-c/Δp-v control

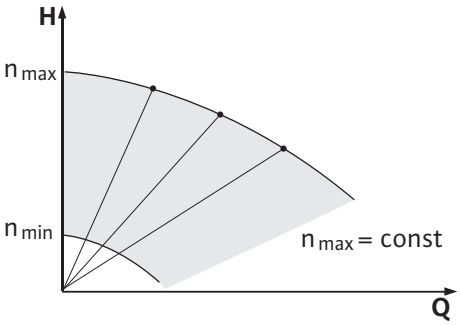

Fig. 33: Constant speed

Δp-c/Δp-v control

Setting	Δp-c	Δp-v
Duty point on maximum pump curve	Starting at the duty point, draw towards the left. Read setpoint H_s and set pump to this value.	Starting at the duty point, draw towards the left. Read setpoint H_s and set pump to this value.
Duty point within the control range	Starting at the duty point, draw towards the left. Read setpoint H_s and set pump to this value.	Move to max. pump curve along control curve, then horizontally to the left, read off setpoint H_s and set the pump to this value.
Setting range	H_{min}, H_{max} see pump curves (e.g. in data sheet)	H_{min}, H_{max} see pump curves (e.g. in data sheet)

Table 16: Δp-c/Δp-v control

NOTICE

Alternatively, you can also set the constant speed or the PID operation mode.

Constant speed

“Constant speed” mode deactivates all other control modes. The speed of the pump is kept to a constant value and set using the rotary knob. The speed range is dependent on the motor and pump type.

PID-Control

The PID controller used is a standard PID controller as described in the control engineering literature.

The PID controller determines the difference between the measured actual value and the desired setpoint (control deviation). It attempts to match the actual value to the setpoint by changing the pump speed via its output signal.

The appropriate sensors make various controls possible (e.g. pressure, differential pressure, temperature or flow control). When selecting a sensor, pay attention to the electrical values in the “Terminal assignment” table.

The control behaviour can be optimised by adjusting the P, I and D parameters.

The proportional component (P component) of the controller amplifies the controller’s output signal directly and linearly. The sign of the P term determines the controller’s direction of action.

The integral component (I component) of the controller integrates via the control deviation. A constant deviation results in a linear amplification of the output signal until the setpoint is reached. The I controller is an accurate but slow controller that results in no permanent control deviation.

The differential component (D component) of the controller does not react to the control deviation, but only to its rate of change. This affects the rate at which the system responds.

The D component is set to zero at the factory because this setting is suitable for many applications.

Change the parameters in small steps only and monitor the effects on the system continuously. Only a trained expert in the field of control engineering may carry out adjustment of the parameter values.

Control component	Factory setting	Setting range	Incrementation
P	0.5	–30.0 … 2.0	0.1
		–1.99 … 0.01	0.01
		0.00 … 1.99	0.01
		2.0 … 30.0	0.1
I	0.5 s	10 ms … 990 ms	10 ms
		1 s … 300 s	1 s
D	0 s	0 ms … 990 ms	10 ms
	(= deactivated)	1 s … 300 s	1 s

Table 17: PID parameter

The sign for the P component determines the control's direction of control action.

Positive PID-Control (default):

If the P component is positive, the control system reacts to falling below the setpoint by increasing the pump speed.

Negative PID-Control

If the P component is negative, the control system reacts to falling below the setpoint by reducing the pump speed.

NOTICE

Possible malfunction in case of incorrect direction of control action for PID control!

The pump runs only at minimum or maximum speed. It will not react to changes in the parameter values.

- Check the controller's direction of control action.

11 Pump operation

11.1 Operating elements

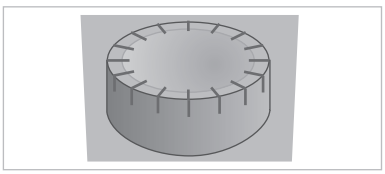

Fig. 34: Operating button

Carry out settings by turning and pressing the operating button. Turn the operating button to the left or right to browse the menus or configure settings.

- Rotate : Menu selection and parameter setting.
- Press : Activation of menus or confirming settings.

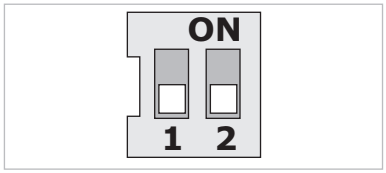

Fig. 35: DIP switch

The DIP switch is beneath the housing cover.

No.	Function
1	Switching between default and service mode. For additional information, see section "Activating/Deactivating service mode"
2	Activating or deactivating access disable. For additional information, see section "Activating/Deactivating access disable"

Table 18: DIP switch

11.2 Display structure

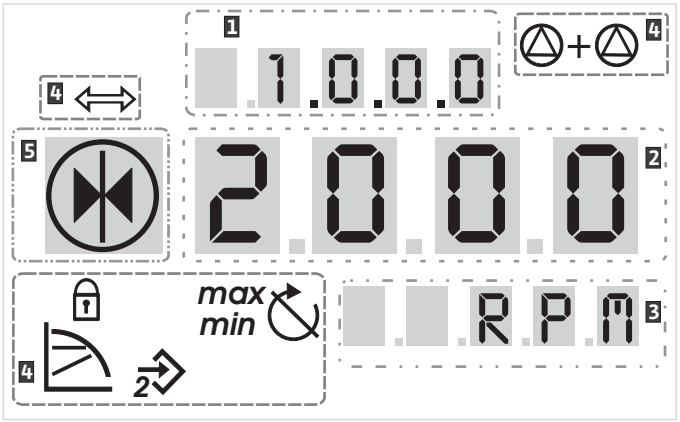

Fig. 36: Display structure

1	Menu number	2	Standard symbols
3	Value display	4	Symbol display
5	Units display		

NOTICE

The display can be rotated by 180°. To change it, see menu number <5.7.1.0>.

11.3 Explanation of standard symbols

The standard symbols are shown on the status display at the positions shown above:

Symbol	Description	Symbol	Description
	Constant speed control	min	Min operation
	Constant Δp-c control	max	Max. operation
	PID-Control		Pump is running
	Input In2 (external setpoint) activated		Pump stopped
	Access disable		Pump running in emergency operation (icon flashes)
	BMS (**B**uilding **M**anagement **S**ystem) is active		Pump stopped in emergency operation (icon flashes)
	DP/MP operating mode: Parallel operation		DP/MP operating mode: Main/reserve

Table 19: Standard symbols of status display

11.4 Symbols in graphics/instructions

In the “Operating instructions” chapter, graphics are used to illustrate the operating concept and setting instructions.

The following symbols are used to simplify the display of menu elements or actions:

11.4.1 Menu elements



- **Menu status page:** standard view on the display.



- **“One level down”:** A menu element with subordinate menu levels which you can switch to (e.g. <4.1.0.0> to <4.1.1.0>).









- **“Information”:** A menu element with information about the device status or settings that cannot be changed.
- **“Selection/setting”:** A menu element that provides access to a changeable setting (element with menu number <X.X.X.0>).
- **“Level up”:** A menu element with superordinate menu levels which you can switch to (e.g. <4.1.0.0> in <4.0.0.0>).
- **Menu error page:** In case of a fault, the current error number is displayed instead of a status page.

11.4.2 Actions













- **Turn the operating button:** Turn the operating button to increase or decrease settings or menu numbers.
- **Press the operating button:** Press the operating button to activate a menu element or confirm a change.
- **Navigate:** Follow the instructions below to navigate until the displayed menu number is reached.
- **Wait time:** The remaining time (in seconds) is displayed until the next state is reached automatically or a manual input can be made.
- **Set DIP switch to “OFF” position:** Set DIP switch number “X” under the housing cover to the “OFF” position.
- **Set DIP switch to “ON” position:** Set DIP switch number “X” under the housing cover to the “ON” position.

11.5 Display modes

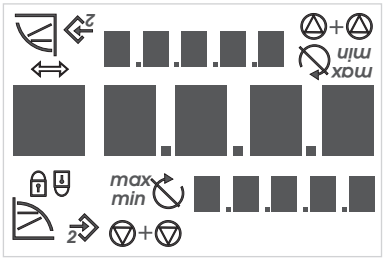

Fig. 37: Display test

Display test

As soon as the electronic module has been supplied with power, a 2-second display test is carried out. All characters of the display are shown. Then the status page appears.

After interruption of the power supply, the electronic module carries out various shut-off functions. The display will be shown for as long as this process continues.



DANGER

Risk of fatal injury due to electrical current! Electrical charge may still be present even if the display is switched off.

Coming into contact with live parts will result in death or serious injuries!

- Before working on the pump, disconnect the supply voltage and wait for 5 minutes.
- Check whether all connections (including potential-free contacts) are voltage-free.
- Never poke around in the openings on the electronic module and never insert anything into it!

11.5.1 Display status page



The standard view on the display is the status page. The current setpoint is displayed in the number segments. Other settings are displayed using symbols.



NOTICE

For twin-head pump operation, the status page also indicates the operating mode (“Parallel operation” or “Main/Reserve”) as a symbol. The partner pump’s display shows “SL”.

11.5.2 Display menu mode

The electronic module functions can be called via the menu structure. The menu contains sub-menus on several levels. Each menu and submenu is assigned a number.

Use the menu items “Level up” or “Level down” to toggle between menu levels, e.g. from menu <4.1.0.0> to <4.1.1.0>.

The currently selected menu item is identified by the menu number and the associated symbol on the display.

Within a menu level, you can select menu numbers in sequence by turning the operating button.

NOTICE

If the operating button is not operated for 30 s in menu mode, the display returns to the status page. Any changes will not be saved.

Every menu level can contain four different element types:

“One level down” menu element

When the display shows the “Level down” arrow, pressing the operating button toggles to the next lower menu level. The number of the new menu level counts up one digit after toggling (e.g. from menu <4.1.0.0> to menu <4.1.1.0>).



“Information” menu element

When this symbol appears, current settings or measurements cannot be changed (default symbol “access disable”). The displayed information is read-only.



“One level up” menu element

When the display shows the “Level up” arrow, briefly pressing the operating button toggles to the next higher menu level (e.g. from menu <4.1.5.0> to menu <4.1.0.0>).



NOTICE

Press and hold the operating button for 2 s while the “Level up” arrow is shown on the display to return to the status display.

“Selection/setting” menu element

The adjacent “Selection/Setting” symbol does not appear on the display. In these instructions, this symbol marks menu items that allow a selection or setting to be made.



If a “Selection/Setting” menu item is selected, pressing the operating button switches to editing mode.

In editing mode, the adjustable value flashes. Turn the operating button to adjust the value; press the operating button again to save the set value.

In some menus, the display briefly shows the “OK” symbol after you press the operating button to confirm the entry



11.5.3 Display error page

If an error occurs, the display changes from the status page to the error page. The display shows the letter “E” and the three-digit error code, separated by a decimal point.



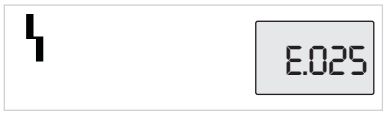

Fig. 38: Error page (error status)

11.5.4 Menu groups

Basic menu

- **<1.0.0.0>:** Setpoint settings
- **<2.0.0.0>:** Operating mode setting
- **<3.0.0.0>:** “Pump on/off” setting

The menus show settings that may need to be changed during normal operation of the pump.

Info menu

- **<4.0.0.0>:** Pump parameter display

The menu <4.0.0.0> and its sub-menu elements show measuring data, device data, operating data and current statuses.

Service menu

- **<5.0.0.0>:** Access to pump parameter settings

The menu <5.0.0.0> and its sub-menu elements provide access to basic system settings for commissioning. The sub-elements are write-protected as long as service mode is not activated.

CAUTION

Risk of material damage!

Incorrect changes to settings can lead to pump operation errors, which in turn can lead to pump or system damage.

- Settings in service mode should only be made during commissioning and only by qualified personnel.

Error acknowledgement menu

- **<6.0.0.0>:** Error acknowledgement

If an error occurs, the display shows the error page. Pressing the operating button takes you from the error page to the error acknowledgement menu. After a waiting period has elapsed, pending fault messages can be acknowledged. For additional information, see “Acknowledging errors” chapter.

CAUTION

Risk of material damage!

Acknowledging faults without eliminating their cause can cause further faults. Material damage may occur to the pump or system.

- Only acknowledge errors after they have been rectified.
- Only allow qualified personnel to rectify faults.
- If in doubt, consult the manufacturer.

For additional information, see “Faults, causes and remedies” chapter

Access disable menu

- **<7.0.0.0>:** Access disable

The “access disable” feature is available when DIP switch 2 is set to ON. The menu cannot be reached via normal navigation.

Pressing the operating button activates or deactivates the access disable feature. The selection is confirmed by pressing the operating button.

11.6 Operating instructions

11.6.1 Adjusting the setpoint

The setpoint can be adjusted on the status page.

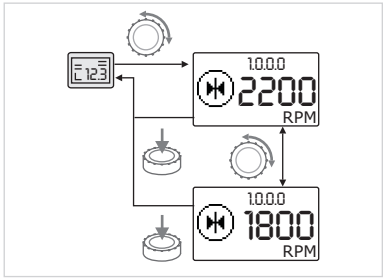

Fig. 39: Entering the setpoint

-  Turn the operating button.
  The display changes to menu <1.0.0.0> and the setpoint starts flashing. Turning the operating button increases or decreases the setpoint.
-  To confirm the change, press the operating button.
  The new setpoint will be accepted and the display will return to the status page.

11.6.2 Changing to menu mode

To change to the menu mode:

- 

While the display is showing the status page, press the operating button for 2 seconds (except in event of a fault).

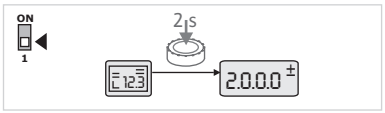

Fig. 40: Standard menu mode

Standard behaviour

The display changes to menu mode. Menu <2.0.0.0> is displayed.

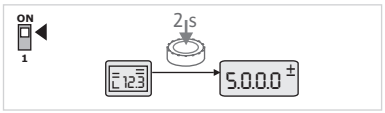

Fig. 41: Service mode menu

Service mode

When service mode is activated (using DIP switch 1), menu <5.0.0.0> is displayed first.

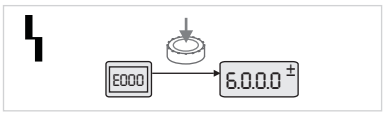

Fig. 42: Fault event mode menu

Fault event

In the event of a fault, menu number <6.0.0.0> is displayed

11.6.3 Navigation

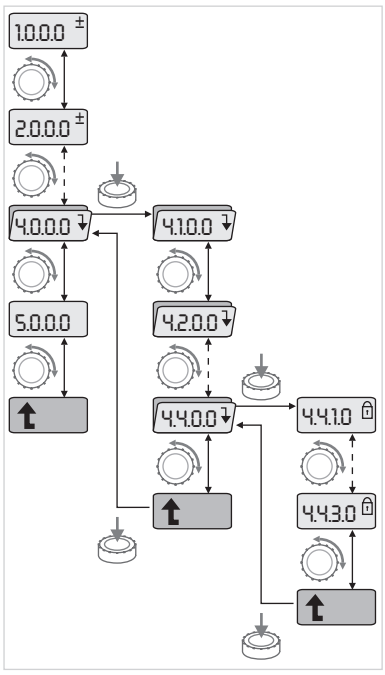

Fig. 43: Example navigation

- Change to menu mode (see “Changing to menu mode” chapter).

Carry out general menu navigation as follows (see example navigation): During navigation, the menu number flashes.

- To select the menu element, turn the operating button.
  The menu number is increased or decreased. The symbol of the menu element and the setpoint or actual value are shown if necessary.

If the downward-pointing arrow for “Level down” is displayed:

- To change to the next menu level down, press the operating button.
  The number of the new menu level is displayed, e.g. when changing from <4.4.0.0> to <4.4.1.0>. The symbols for the menu element and/or current value (setpoint, actual value or selection) are displayed.
- To return to the next highest menu level, select the “Level up” menu element and press the operating button.
  The number of the new menu level is displayed, e.g. when changing from <4.4.1.0> to <4.4.0.0>.

NOTICE

If the operating button is pressed for 2 seconds while a “Level up” menu element is selected, the display jumps back to the status page.

11.6.4 Changing selection/settings

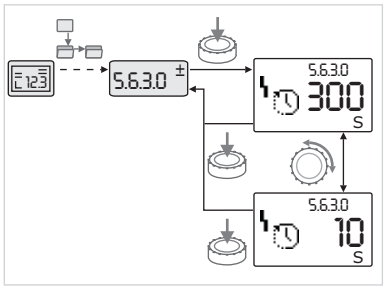

Fig. 44: Changing settings and returning to the “Selection/settings” menu element

To change a setpoint or a setting:

- Navigate to the desired “Selection/settings” menu element.
  The current value or status of the setting and the associated symbol are displayed.
- Press the operating button. The symbol representing the setpoint or the setting flashes.
- Turn the operating button until the desired setpoint or setting is displayed. For an explanation of the settings represented by the symbols, see table in the “Reference menu element” chapter.

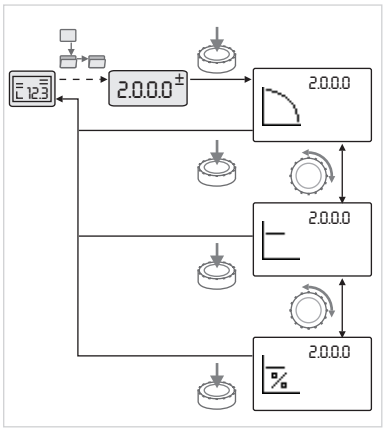

Fig. 45: Changing settings and returning to the status page

- Press the operating button again.

The selected setpoint or setting is confirmed, and the value or symbol stops flashing. The display is back in menu mode with the menu number unchanged. The menu number flashes.

NOTICE

When values in <1.0.0.0>, <2.0.0.0> and <3.0.0.0>, <5.7.7.0> and <6.0.0.0> are changed, the display jumps back to the status page.

11.6.5 Accessing information

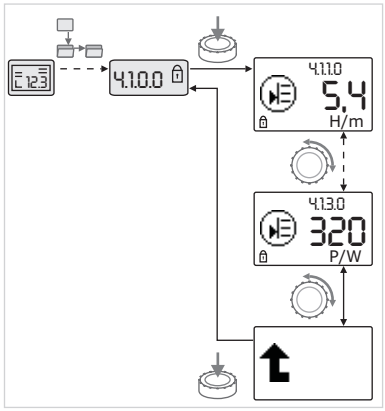

Fig. 46: Accessing information

Changes cannot be made in “Information” menu elements. These are indicated on the display by the default “access disable” symbol.

To access current settings:

- Navigate to the desired “Information” menu element (<4.1.1.0> in the example). The current value or status of the setting and the associated symbol are displayed. Pressing the operating button has no effect.
- Turn the operating button to access the “Information” menu elements in the current sub-menu.
  For an explanation of the settings represented by the symbols, see table in the “Reference menu element” chapter.
- Turn the operating button until the “Level up” menu element is displayed.
- Press the operating button.
  The display returns to the next highest menu level (<4.1.0.0> here).

11.6.6 Activating/deactivating service mode

Additional settings can be made in service mode. The mode is activated or deactivated as follows.

CAUTION

Risk of material damage caused by changing the settings incorrectly!

Incorrect changes to settings can lead to pump operation errors and cause damage to the pump or system.

- Settings in service mode should only be made during commissioning and only by qualified personnel.

- Set DIP switch 1 to the “ON” position.
  Service mode is activated. The symbol shown here flashes on the status page.

  The sub-elements of menu <5.0.0.0> switch from the “Information” element type to the “Selection/setting” element type, and the standard “access disable” symbol (see symbol) is hidden for the relevant elements (except for <5.3.1.0>).

The values and settings for these elements can now be edited.

- 

To deactivate, return the switch to its starting position.

11.6.7 Activating/deactivating access disable

In order to prevent inadmissible changes to the pump settings, all functions can be disabled.


When access is disabled, this is shown on the status page by the default “access disable” symbol.

To activate or deactivate:

- 

Set DIP switch 2 to the “ON” position.
Menu <7.0.0.0> is displayed.
- 
Turn the operating button to activate or deactivate the disable function.
- 
To confirm the change, press the operating button.

Current status of disable function:

- 
Disable active
No changes can be made to setpoints or settings. Read-only access to all menu elements is maintained.
- 
Disable inactive: the elements of the basic menu can be edited (menu elements <1.0.0.0>, <2.0.0.0> and <3.0.0.0>).

NOTICE

To edit the sub-elements of menu <5.0.0.0>, service mode must also be activated.

- 

Reset DIP switch 2 to the “OFF” position.
The display returns to the status page.

NOTICE

Errors can be acknowledged after a waiting period despite the “access disable” being active.

11.6.8 Termination

In order to establish a clear communication connection between two electronic modules, both line ends must be terminated.

The electronic modules are factory set for twin-head pump communication and the termination is permanently enabled. No further settings are required.

11.7 Menu elements reference

This section gives an overview of all items on all menu levels. The menu number and item type are marked separately, the function of each item is explained. If applicable, there is information about the setting options of the individual elements.

NOTICE

Some items are hidden under certain conditions. They are therefore skipped when navigating the menu.

Example: If the external setpoint adjustment in menu <5.4.1.0> is set to “OFF”, menu number <5.4.2.0> is hidden. Menu number <5.4.2.0> is only visible if the external setpoint adjustment in menu <5.4.1.0> is set to “ON”.

No.	Name	Type	Symbol	Values/explanations	Display conditions
1.0.0.0	Setpoint	±		Setpoint adjustment/display (for additional information, see section “Adjusting the setpoint”)	
2.0.0.0	Control mode	±		Control mode adjustment/display (for additional information, see section “Control modes” and “Setting the control mode”)	
				Constant speed control	
				Constant Δp-c control	
				PID-Control	
2.3.2.0	Δp-v gradient			Setting the gradient of Δp-v (value in %)	Not displayed for all pump types
3.0.0.0	Pump on/off	±		ON Pump switched on	
				OFF Pump switched off	
4.0.0.0	Information			Information menus	
4.1.0.0	Actual values			Display of current actual values	
4.1.1.0	Actual values sensor (In1)			Depending on current control mode. Δp-c, Δp-v: Value H in m PID-Control: Value in %	Not displayed for constant speed
4.1.3.0	Power			Current power input P_1 in W	
4.2.0.0	Operating data			Display of operating data	The operating data refers to the electronic module currently being operated
4.2.1.0	Operating hours			Sum of the pump’s active operating hours (counter can be reset via infrared interface)	
4.2.2.0	Consumption			Energy consumption in kWh/MWh	
4.2.3.0	Countdown, pump cycling			Time until pump cycling in h (increments of 0.1 h)	Only displayed at the MA (main pump) and for internal pump cycling. Can be set in the service menu <5.1.3.0>
4.2.4.0	Time left until pump kick			Time until next pump kick (after a pump downtime of 24 h (e.g. via “External off”), the pump automatically runs for 5 s)	Only displayed if pump kick is activated
4.2.5.0	Mains On counter		123...	Number of switching-on procedures of the supply voltage (each occasion the supply voltage is established after an interruption is counted)	
4.2.6.0	Pump kick counter		123...	Number of successful pump kicks	Only displayed if pump kick is activated
4.3.0.0	States		ON OFF ON		
4.3.1.0	Base-load pump			The value display statically shows the identity of the regular base-load pump. The units display statically shows the identity of the temporary base-load pump	Only displayed at the MA (main pump)

No.	Name	Type	Symbol	Values/explanations	Display conditions
4.3.2.0	SSM			ON State of SSM relay if there is a fault message	
				OFF State of SSM relay if there is no fault message	
4.3.3.0	SBM			ON State of SBM relay if there is a standby/run or mains on signal	
				OFF State of SBM relay if there is no standby/run or mains on signal	
				SBM Run signal	
				SBM Standby signal	
				SBM mains on signal	
4.3.4.0	Ext. off			Signal present at the input “External off”	
				OPEN Pump is switched off	
				SHUT Pump is enabled	
4.3.5.0	BMS protocol type			Bus system active	Only displayed when BMS is active
				LON Field bus system	Only displayed when BMS is active
				CAN Field bus system	Only displayed when BMS is active
				Gateway protocol	Only displayed when BMS is active

No.	Name	Type	Symbol	Values/explanations	Display conditions
4.3.6.0	AUX			State of “AUX” terminal	
4.4.0.0	Device data			Displays device data	
4.4.1.0	Pump name			Example: Stratos GIGA 40/4-63/11 (display in ticker format)	Only the basic pump model appears on the display; version names are not shown
4.4.2.0	Software version of user controller			Displays the software version of the user controller	
4.4.3.0	Software version of motor controller			Display the software version of the motor controller	
5.0.0.0	Service			Service menus	
5.1.0.0	Multi pump			Twin-head pump	Only displayed when DP is active (incl. sub-menus)
5.1.1.0	Operating mode	±		Main/standby operation	Only displayed at the MA (main pump)
				Parallel operation	Only displayed at the MA (main pump)
5.1.2.0	Setting, MA/SL	±		Manually switches from “Main pump” to “Standby pump” (partner pump) mode	Only displayed at the MA (main pump)
5.1.3.0	Pump cycling				Only displayed at the MA (main pump)
5.1.3.1	Manual pump cycling	±		Carries out pump cycling independent of the countdown	Only displayed at the MA (main pump)
5.1.3.2	Internal/external	±		Internal pump cycling	Only displayed at the MA (main pump)
				External pump cycling	Only displayed at the MA (main pump), see “AUX” terminal
5.1.3.3	Internal: Time interval	±		Can be set between 8 h and 36 h in 4 h steps	Displayed when internal pump cycling is activated
5.1.4.0	Pump enabled/ disabled	±		Pump enabled	
				Pump disabled	
5.1.5.0		±		Individual fault signal	Only displayed at the MA (main pump)
				Collective fault signal	Only displayed at the MA (main pump)
5.1.6.0	SBM	±		Individual readiness signal	Only displayed at the MA (main pump) and for SBM function standby/run
				Individual run signal	Only displayed at the MA (main pump)
				Collective readiness signal	Only displayed at the MA (main pump)
				Collective run signal	Only displayed at the MA (main pump)
5.1.7.0	External off	±		Individual External off	Only displayed at the MA (main pump)
				Collective External off	Only displayed at the MA (main pump)

No.	Name	Type	Symbol	Values/explanations	Display conditions
5.2.0.0	BMS	↴		Settings for Building Management System (BMS) – building automation	Only displayed if BMS is active, incl. all submenus
5.2.1.0	LON / CAN / IF module Wink/ Service	±		The wink function permits the identification of a device in the BMS network. A “wink” is executed by confirmation.	Only displayed when LON, CAN or IF module is active
5.2.2.0	Local/remote operation	±	R T	BMS local operation	Temporary state, automatic reset to remote operation after 5 min
			R T	Remote BMS operation	
5.2.3.0	Bus address	±	#	Setting of bus address	
5.2.4.0	IF gateway val A	±	A	Specific settings of the IF module, depends on protocol type	Further information can be found in the installation and operating instructions of the IF modules
5.2.5.0	IF gateway val C	±	C		
5.2.6.0	IF gateway val E	±	E		
5.2.7.0	IF gateway val F	±	F		
5.3.0.0	In1 (sensor input)	↴	1	Settings for sensor input 1	Not displayed in constant speed mode (incl. all sub-menus)
5.3.1.0	In1 (sensor value range)	🔒	1	Display of sensor value range 1	Not displayed with PID-Control
5.3.2.0	In1 (value range)	±		Value range setting Possible values: 0 ... 10 V / 2 ... 10 V / 0 ... 20 mA / 4 ... 20 mA	
5.4.0.0	In2	↴	2		External setpoint input 2 settings
5.4.1.0	In2 active/inactive	±	2	ON External setpoint input 2 active	
			2	OFF External setpoint input 2 inactive	
5.4.2.0	In2 (value range)	±	2	Value range setting Possible values: 0 ... 10 V / 2 ... 10 V / 0 ... 20 mA / 4 ... 20 mA	Not displayed when In2 = inactive
5.5.0.0	PID parameter	↴	PID	Settings for PID-Control	Only displayed if PID-Control is active (incl. all submenus)
5.5.1.0	P parameter	±	PID	Setting of the proportional term of the control	
5.5.2.0	I parameter	±	PID	Setting of the integral term of the control	
5.5.3.0	D parameter	±	PID	Setting of the derivative term of the control	
5.6.0.0	Error	↴		Settings for behaviour in the event of a fault	
5.6.1.0	HV/AC	±		HV “heating” mode	
				AC “cooling/air-conditioning” mode	
5.6.2.0	Emergency operation speed	🔒	RPM	Display of emergency operation speed	
5.6.3.0	Auto reset time	±		Time until automatic acknowledgement of an error	

No.	Name	Type	Symbol	Values/explanations	Display conditions
5.7.0.0	Other settings 1				
5.7.1.0	Display orientation			Display orientation	
				Display orientation	
5.7.2.0	Delivery head correction for in-line pumps			If delivery head correction is active, the deviation of the factory-set differential pressure measured by the differential pressure sensor connected to the pump flange is taken into account and corrected.	Only displayed in Δp-c mode. Is not displayed for all pump variants
				Delivery head correction off	
				Delivery head correction on (factory setting)	
5.7.2.0	Delivery head correction for monobloc pumps			If delivery head correction is active, the deviation of the factory-set differential pressure measured by the differential pressure sensor connected to the pump flange and the different flange diameters are taken into account and corrected.	Only displayed in Δp-c and Δp-v mode. Is not displayed for all pump variants
				Delivery head correction off	
				Delivery head correction on (factory setting)	
5.7.5.0	Switching frequency		PWM	HIGH High switching frequency (factory setting)	Carry out the switchover/change only when the pump is at a standstill (not when the motor is running)
			PWM	MID Medium switching frequency	
			PWM	LOW Low switching frequency	
5.7.6.0	SBM function			Setting for behaviour of signals	
				SBM run signal	
				SBM standby signal	
				SBM mains on signal	
5.7.7.0	Factory setting			OFF (default setting) Settings are not changed when confirmed.	Is not displayed when access disable active. Is not displayed when BMS is active
				ON Settings are reset to factory setting when confirmed. **Caution!** All manual settings will be lost	Is not displayed when access disable active. Is not displayed when BMS is active For parameters that are changed by a factory setting, see “Factory settings” section.
5.8.0.0	Other settings 2				
5.8.1.0	Pump kick			ON (factory setting) Pump kick is switched on	
5.8.1.1	Pump kick active/inactive				

No.	Name	Type	Symbol	Values/explanations	Display conditions
				OFF Pump kick is switched off	
5.8.1.2	Pump kick time interval	±		Can be set between 2 h and 72 h in 1 h steps	Not displayed if pump kick was de-activated
5.8.1.3	Pump kick speed	±		Can be set between the pump's minimum and maximum speeds	Not displayed if pump kick was de-activated
6.0.0.0	Error acknow-ledgement	±	RESET	For additional information, see "Acknow-ledging errors" section.	Only displayed if there is an error.
7.0.0.0	Access disable	±		Access disable inactive (changes possible) (for additional information, see section "Ac-tivating/Deactivating access disable").	
				Access disable active (no changes possible) (for additional information, see "Activating/ Deactivating access disable" section)	

Table 20: Menu structure

12 Decommissioning

12.1 Switching off the pump and tem-porary shutdown

CAUTION

Risk of property damage due to overheating!

Hot fluids can damage the pump seals when the pump is at a standstill.

After deactivating the heat source:

- Allow the pump to run until the fluid temperature has dropped to an appropriate level.

CAUTION

Risk of property damage due to frost!

If there is a danger of frost:

- Drain the pump completely to avoid damage.

- **Close** the shut-off device in the pressure pipe. If a non-return valve is installed in the pressure pipe, and there is counter pressure, the shut-off device can remain open.
- Do **not** close the shut-off device in the suction line.
- Switch off the pump and allow it to drain completely. Ensure the coasting is smooth.
- If there is no danger of frost, make sure the fluid level is sufficient.
- Operate the pump every month for 5 minutes. Doing this prevents deposits from occur-ring in the pump compartment.

12.2 Shutdown and storage



WARNING

Risk of injury and damage to property!

- Dispose off the pump contents and rinsing fluid by taking the legal regulations into account.
- Always wear protective clothing, safety gloves and safety glasses when working.

- Clean the pump thoroughly prior to storage!
- Drain the pump completely and rinse thoroughly.
- The remaining fluid and rinsing fluid should be drained, collected and disposed off via the drain plug. Observe local regulations along with the notes under "Disposal"!
- Seal suction and discharge connection with caps.
- After removal, store the pump in a dry, dust-free location.

13 Maintenance/repair

- Maintenance work: The technician must be familiar with the use of operating fluids and their disposal.
- Electrical work: a qualified electrician must carry out the electrical work.
- Installation/dismantling: The technician must be trained in the use of the necessary tools and fixation materials.

It is recommended to have the pump serviced and checked by the Wilo customer service.



DANGER

Risk of fatal injury due to electrical current!

Improper conduct when carrying out electrical work can lead to death due to electric shock!

- Any work on electrical devices may only be carried out by a qualified electrician.
- Before carrying out any work, disconnect the unit from the power supply and secure it against accidental switch-on.
- Any damage to the pump connection cable should only ever be rectified by a qualified electrician.
- Never poke around in the openings of the motor or electronic module or insert anything into them.
- Follow the installation and operating instructions for the pump, level control device and other accessories.
- After completing the work, refit previously dismantled protective devices, for example, covers or coupling covers.



DANGER

When dismantled, the permanent magnet rotor inside the pump can pose mortal danger for people with medical implants (e.g. pacemakers).

- Follow the general behavioural guidelines that apply to handling electrical devices!
- Do not open the motor!
- Dismantling and installation of the rotor may only be carried out by Wilo customer service! If you have been fitted with a pacemaker, you must **not** carry out this kind of work!



NOTICE

The magnets inside the motor do not pose a danger **provided the motor is completely assembled**. Persons with pacemakers can approach the pump without restrictions.



WARNING

Personal injury due to strong magnetic forces!

Opening the motor leads to high, abruptly occurring magnetic forces. This can lead to serious cuts, crushing injuries and bruises.

- Do not open the motor!
- Only allow Wilo customer service to dismantle and install the motor flange and the bearing plate for maintenance and repair work!



DANGER

Risk of fatal electrical shock! Generator or turbine operation during pump flow!

Even without the electronic module (without electrical connection), there may be dangerous contact voltage at the motor contacts!

- Check for absence of voltage and cover or cordon off adjacent live parts!
- Close the shut-off devices upstream and downstream of the pump!



DANGER

Potentially fatal injury due to electronic module not being installed!

A life-threatening voltage may be present at the motor contacts! Normal operation of the pump is only permitted with the electronic module installed.

- Never connect or operate the pump without the electronic module mounted!



DANGER

Danger of death from falling parts!

The pump itself and pump parts can have a very high net weight. Falling parts pose a risk of cuts, crush injuries, bruises or impacts, which can be fatal.

- Always use suitable lifting accessories and secure parts against falling.
- Never stand below a suspended load.
- During storage and transport, as well as before all installation and assembly work, ensure that the pump is in a safe position and standing securely.



DANGER

Danger of death due to ejected tools!

The tools used during maintenance work on the motor shaft can be thrown away if they come into contact with rotating parts. Injuries and even death are possible!

- The tools used during maintenance work must be removed completely before the pump is started up!



WARNING

There is a risk of burns or freezing upon coming into contact with the pump/system.

Depending on the pump and system operating conditions (fluid temperature), the entire pump can become very hot or very cold.

- Keep a safe distance during operation!
- Allow the system and pump to cool down to room temperature!
- Always wear protective clothing, safety gloves and safety glasses when working.



WARNING

Sharp edges on the impeller!

Sharp edges can form on the impeller. There is a risk of limbs being severed!

- Wear safety gloves to protect against cuts!



NOTICE

For all installation work, use the forked spacer to set the correct impeller position in the pump housing!

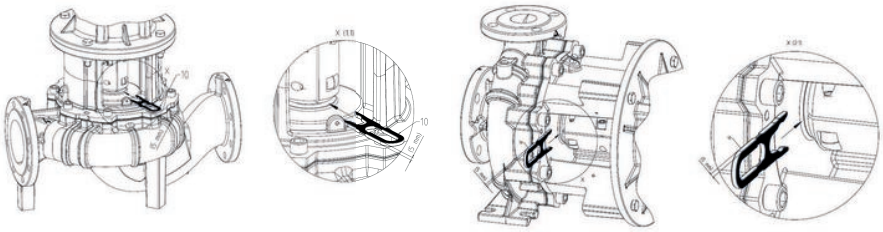

Forked spacer for setting work

13.1 Operation monitoring

CAUTION

Risk of property damage!

Improper operation can damage the pump or motor. Operation with closed shut-off devices is critical and generally dangerous with hot liquids. Do not run the pump for longer than **1 min** without flow. Dry running causes a build-up of energy in the pump, which can damage the shaft, impeller, and mechanical seal.

- Only run the pump with fluid.
- Do not operate the pump with the shut-off device in the suction line closed.
- Do not operate the pump for a longer period of time with the shut-off device in the discharge line closed. This can cause the fluid to overheat.

The pump must run quietly and vibration-free at all times.

- Check the static gaskets and the shaft seal regularly for leakages.
- For pumps with mechanical seals, there is little to no visible leakage during operation. If a gasket is leaking significantly, this is a sign that the gasket surfaces are worn. The gasket must be replaced. The service life of a mechanical seal greatly depends on the operating conditions (temperature, pressure, fluid properties).
- Wilo recommends briefly putting the standby pumps into operation at least once a week to ensure they are always ready for operation.

13.2 Maintenance tasks

- Check the air supply to the motor housing at regular intervals. Dirt impairs the cooling of the motor and electronic module. If necessary, remove dirt and restore unrestricted air supply.

13.3 Draining and cleaning



WARNING

Risk of injury and damage to property!

- Dispose off the pump contents and rinsing fluid by taking the legal regulations into account.
- Always wear protective clothing, protective gloves and protective goggles when working.

13.4 Replacing the mechanical seal

There may be a slight amount of drip leakage during the running-in period. Even during normal operation of the pump, it is normal for there to be slight leakage with the occasional formation of drops.
In addition, carry out a visual inspection regularly. If leakage is clearly visible, replace the gasket.
Wilo offers a repair kit which contains the necessary parts for replacement.

NOTICE

The magnets inside the motor pose no risk to persons with pacemakers, provided that the motor is not opened and the rotor is not dismantled. The mechanical seal can be replaced without any risk.

Dismantling:

WARNING

Risk of scalding!

At high fluid temperatures and system pressures, allow the pump to cool down first and then depressurise the system.

1. Disconnect the system from the power supply and secure it against being switched on again without authorisation.
2. Make sure it is not live.
3. Earth the work area and short-circuit.
4. Close the shut-off devices upstream and downstream of the pump.
5. Disconnect the mains connection cable. If present, remove the cable for the differential pressure sensor.
6. Depressurise the pump by opening the air vent valve (Fig. I/II/III, Item 1.31).

NOTICE

For all subsequent work, observe the torque specified for the respective thread type (see tightening torques table)!

7. If present, remove the pressure measurement lines of the differential pressure sensor.
8. Disconnect the motor and mains connection cables if the cable is too short for dismantling the drive.
9. Remove the coupling guard (Fig. I/II/III, Item 1.32) using a suitable tool (e.g. screwdriver).
10. Loosen the coupling screws (Fig. I/II/III, Item 1.5) on the coupling unit.
11. Loosen the motor fastening screws (Fig. I/II/III, Item 5) on the motor flange and lift the drive off the pump with suitable hoisting gear.
12. Remove the lantern unit with coupling, shaft, mechanical seal and impeller from the pump housing by loosening the lantern fastening screws (Fig. I/II/III, Item 4).
13. Loosen the impeller fastening nut (Fig. I/II/III, Item 1.11), remove the conical spring washer underneath (Fig. I/II/III, Item 1.12) and pull the impeller (Fig. I/II/III, Item 1.13) off the pump shaft.
14. Dismantle the shim (Fig. I/II/III, Item 1.16) and if required the key (Fig. I/II/III, Item 1.43).
15. Pull the mechanical seal (Fig. I/II/III, Item 1.21) off the shaft.
16. Pull the coupling (Fig. I/II/III, Item 1.5) with the pump shaft out of the lantern.
17. Thoroughly clean the sliding/seat surfaces of the shaft. If the shaft is damaged, also replace the shaft.
18. Remove the stationary ring on the mechanical seal with the collar from the lantern flange and the O-ring (Fig. I/II/III, Item 1.14). Clean the gasket seats.

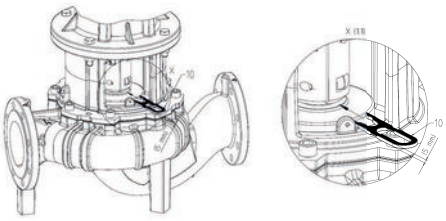

Fig. 47: Positioning the forked spacer

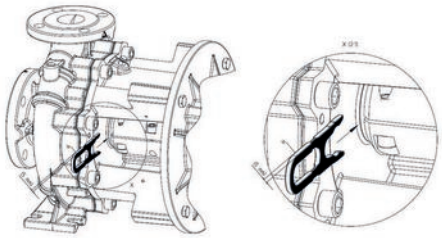

Installation

1. Press a new mechanical seal stationary ring with collar into the gasket seat of the lantern flange. A commercially available dishwashing liquid can be used as a lubricant.
2. Install a new O-ring in the groove of the O-ring seat of the lantern.
3. Check the coupling sliding surfaces, if necessary, clean and slightly oil them.
4. Pre-install the coupling shells on the pump shaft with spacer shims inserted in between and insert the pre-assembled coupling shaft unit carefully into the lantern.
5. Pull a new mechanical seal onto the shaft. A commercially available dishwashing liquid can be used as a lubricant (if required, insert the key and the shim again).
6. Install the impeller with washer(s) and nut, countering at the impeller's outer diameter while doing so. Avoid damage to the mechanical seal due to jamming.
7. Insert the pre-assembled lantern unit carefully into the pump housing and screw together. As you do so, hold onto the rotating parts of the coupling to avoid damage to the mechanical seal.
8. Slightly loosen the coupling screws. Slightly open the pre-assembled coupling.
9. Install the motor using suitable hoisting gear and tighten the connection between lantern and motor.
10. Push the forked spacer (Fig. 47) between the lantern and coupling. The forked spacer must sit there without any play.
11. Slightly tighten the coupling screws (Fig. I/II/III, Item 1.41) first until the coupling half shells are in contact with the shims.
12. Afterwards, screw the coupling together evenly. In doing so, the specified distance between the lantern and the coupling of 5 mm is automatically adjusted via the forked spacer.
13. Remove the forked spacer.
14. If present, attach the pressure measurement lines of the differential pressure sensor.
15. Install the coupling guard.
16. Reattach the mains connection and, if present, the cable of the differential pressure sensor.

NOTICE

Observe the steps for commissioning (see "Commissioning" section).

17. Open the shut-off devices upstream and downstream of the pump.
18. Reset the fuse.

13.5 Replacing the motor/drive

13.5.1 Dismantling the electronic module



DANGER

Danger of death due to electrical current!

Improper conduct when carrying out electrical work can lead to death due to electric shock!

- Any work on electrical devices may only be carried out by a qualified electrician.
- Before commencing work, switch off the voltage in the unit, secure it against being switched on again and wait 5 min.
- Check whether all connections (including potential-free contacts) are voltage-free.
- Never poke around in the openings on the electronic module or insert anything into them.
- Any damage to the pump connection cable should only ever be rectified by a qualified electrician.
- Observe the installation and operating instructions for the pump, motor and other accessories.
- Reinstall any uninstalled safety devices, such as module covers, once the work is complete.



DANGER

Danger of death due to contact voltage! Even when it is disconnected, high contact voltages can still occur in the electronic module due to non-discharged capacitors.

Touching live parts will result in serious injuries or death!

- Before working on the pump, interrupt the supply voltage and wait 5 min!
- Check whether all connections (including potential-free contacts) are voltage-free.
- Never poke around in the openings of the electronic module or insert anything into them!



DANGER

Risk of fatal electrical shock! Generator or turbine operation during pump flow!

Even without the electronic module (without electrical connection), there may be dangerous contact voltage at the motor contacts!

- Check for absence of voltage and cover or cordon off adjacent live parts!
- Close the shut-off devices upstream and downstream of the pump!



NOTICE

The magnets inside the motor pose no risk to persons with pacemakers, provided that the motor is not opened and the rotor is not dismantled. The electronic module can be replaced without any risk.

1. Disconnect the system from the power supply and secure it against being switched on again without authorisation.
2. Close the shut-off devices upstream and downstream of the pump.
3. Ensure system is voltage-free.
4. Earth the work area and short-circuit.
5. Disconnect the mains cable. If present, remove the cable for the differential pressure sensor.

6. If required, remove additional cables (sensors, signals etc.).
7. Remove the screws and tooth lock washers and pull the electronic module vertically upward.

CAUTION

Risk of material damage if the electronic module is not installed!

Normal operation of the pump is only permitted with the electronic module installed!
The pump must not be connected or operated without the electronic module being installed!

NOTICE

The electronic module must be dismantled and installed according to the instructions enclosed with the spare part!

CAUTION

Risk of material damage due to lack of ventilation of the electronic module!

For motor powers ≥ 11 kW, the electronic module features a built-in speed-controlled fan for cooling. The fan switches on automatically when the heat sink reaches 60 °C.
The fan draws in air from the outside, which is guided over the outer surface of the heat sink. It only runs when the electronic module is operated under load. Depending on the prevailing ambient conditions, dust drawn in via the fan might collect in the heat sink.

- Check electronic modules ≥ 11 kW for contamination at regular intervals.
- Clean fan and heat sink if required.

13.5.2 Installation

Installation must be carried out based on the detailed drawings in the section “Dismantling” as well as the general drawings in the section “Spare parts”.

- Clean and check the single components for wear before installation. Damaged or worn parts must be replaced with original spare parts.
- Coat location points with graphite or something similar before installation.
- Check the O-rings for damage and replace if necessary.
- Flat gaskets must be constantly replaced.



DANGER

Risk of fatal injury due to electrical current!

Improper conduct when carrying out electrical work can lead to death due to electric shock!

- Any work on electrical devices may only be carried out by a qualified electrician.
- Before carrying out any work, disconnect the unit from the power supply and secure it against accidental switch-on.
- Any damage to the pump connection cable should only ever be rectified by a qualified electrician.
- Observe the installation and operating instructions for the pump, motor and other accessories.
- Never poke around in the electronic module or motor openings or insert anything into them.
- Never operate the pump without the electronic module being installed.
- Reinstall any uninstalled safety devices, such as module or coupling covers, once the work is complete.



NOTICE

Observe the drawings in the section “Spare parts”.

13.5.2.1 Installing the electronic module



DANGER

Danger of death due to electrical current!

Improper conduct when carrying out electrical work can lead to death due to electric shock!

- Any work on electrical devices may only be carried out by a qualified electrician.
- Before commencing work, switch off the voltage in the unit, secure it against being switched on again and wait 5 min.
- Check whether all connections (including potential-free contacts) are voltage-free.
- Never poke around in the openings of the electronic module or insert anything into them!
- Any damage to the pump connection cable should only ever be rectified by a qualified electrician.
- Observe the installation and operating instructions for the pump, motor and other accessories!
- Reinstall any uninstalled safety devices, such as module covers, once the work is complete!

1. Earth the work area and short-circuit. Disconnect the mains cable. If present, remove the cable for the differential pressure sensor.
2. Fit the new O-ring between the electronic module and the motor on the contacting chamber.
3. Press the electronic module down vertically into the motor contacting and fasten it with screws and the tooth lock washers.
4. Remove the module cover.
5. Connect the mains cable.
6. If present, connect the differential pressure sensor cable.
7. For all other cable connections, see the “Electrical Connection” section.
8. Carefully close and tighten the module cover.

9. For cable connections and securing the module cover, please also see the “Screw tightening torques for electronic module” table.

Ensure that no drips can run into the electronic module:

- Bend the cables into a drain loop near the threaded cable gland
- Unused cable glands should be sealed with the sealing washers provided and screwed tight.

CAUTION

Risk of material damage if the electronic module is not installed!

Normal operation of the pump is only permitted with the electronic module installed!
The pump must not be connected or operated without the electronic module being installed!

NOTICE

The electronic module must be dismantled and installed according to the instructions enclosed with the spare part!

CAUTION

Risk of material damage due to lack of ventilation of the electronic module!

For motor powers ≥ 11 kW, the electronic module features a built-in speed-controlled fan for cooling. The fan switches on automatically if the heat sink reaches 60 °C.
The fan draws in air from the outside, which is guided over the outer surface of the heat sink. It only runs when the electronic module is operated under load. Depending on the prevailing ambient conditions, dust drawn in via the fan might collect in the heat sink.

- Check electronic modules ≥ 11 kW for contamination at regular intervals.
- Clean fan and heat sink if required.

Component	Thread	Tightening torque [Nm] ± 10 %	Installation information
Control terminals	–	0.5	
Power terminals	–	1.3	
Earth terminals	–	0.5	
Electronic module – motor (tie bolts)	–	4.0	
Module cover	M6	4.3	
Threaded cable gland union nut	M12x1.5	3.0	1x threaded cable gland M12 reserved for connecting cable for an optional differential pressure sensor
	M16x1.5	6.0	
	M20x1.5	8.0	
	M25x1.5	11.0	
	M40x1.5	16	

Table 21: Screw tightening torques for electronic module

13.5.3 Screw tightening torques

Always tighten screws diagonally.

Screw connection				Tightening torque
Post	Shaft size	Size/tensile strength class		Nm ± 10 %
Impeller – Shaft[1)]	D28	M14	A2-70	70
Impeller – Shaft[1)]	D38	M18		145
Impeller – Shaft[1)]	D48	M24		350
Pump housing – Lantern		M16	8.8	100
Lantern – Motor		M8		25
Lantern – Motor		M10		35
Lantern – Motor		M12		60
Lantern – Motor		M16		100
Coupling[2)]		M6	10.9	12
Coupling[2)]		M8		30
Coupling[2)]		M10		60
Coupling[2)]		M12		100
Coupling[2)]		M14		170
Coupling[2)]		M16		230
Supporting block – Pump housing		M12	8.8	60
		M16		100
Supporting block – Pump support foot		M20		170
		M24		350
Supporting block – Motor				

Installation information:

1) Lubricate the thread with Molykote® P37 or comparable.

2) Tighten the screws uniformly, keep the gap even on both sides.

Table 22: Tightening torques

14 Spare parts

Obtain original spare parts only from a qualified specialist or Wilo customer service. To avoid queries and order errors, please provide all pump and drive rating plate data with every order.

CAUTION

Risk of material damage!

Trouble-free pump operation can only be guaranteed when original spare parts are used.

Use only original Wilo spare parts!

Information to be provided when ordering spare parts: Spare part numbers, spare part designations, all data from pump and drive rating plate. This helps prevent return queries and incorrect orders.

NOTICE

For all installation work, the forked spacer is required for setting the correct impeller position in the pump housing!

For the allocation of assemblies, see Fig. I/II/III

No.	Part	Details	No.	Part	Details
1	Exchange kit (complete)		1.5	Coupling (complete)	
1.1	Impeller (kit) with:		2	Motor	

No.	Part	Details	No.	Part	Details
1.11		Nut	3	Pump housing (kit) with:	
1.12		Conical spring washer	1.14		O-ring
1.13		Impeller	3.1		Pump housing
1.14		O-ring	3.2		Switchover valve ≤ DN 80 (only Stratos GIGA-D pumps)
1.15		Shim	3.3		Switchover valve DN 100/DN 125 (only Stratos GIGA-D pumps)
1.16		Shim	3.4		Switchover valve DN 150/DN 200 (only Stratos GIGA-D pumps)
1.2	Mechanical seal (kit) with:		3.5		Screw plug for drain hole
1.11		Nut	4	Fastening screws for lantern/pump housing	
1.12		Conical spring washer	5	Fastening screws for motor/lantern	
1.14		O-ring	6	Nut for motor/lantern fixation	
1.15		Shim	7	Washer for motor/lantern fixation	
1.21		Mechanical seal			
1.3	Lantern (kit) with:				
1.11		Nut	10	Forked spacer (Fig. 47)	
1.12		Conical spring washer	11	Electronic module	
1.14		O-ring	12	Fastening screw for electronic module/motor	
1.15		Shim			
1.31		Air vent valve			
1.32		Coupling guard			
1.33		Lantern			
1.4	Coupling/shaft (kit) with:				
1.11		Nut			
1.12		Conical spring washer			
1.14		O-ring			
1.41		Complete coupling/shaft			
1.42		Circlip			
1.43		Key			
1.44		Coupling screws			

Table 23: Spare parts table

15 Faults, causes and remedies



DANGER

Risk of fatal injury due to electrical current!

Improper conduct when carrying out electrical work can lead to death due to electric shock!

- Electrical work must be carried out by a qualified electrician!
- Observe local regulations!



WARNING

Risk of injury from rotating components!

No persons are allowed to be present in the working area of the pump. There is a risk of injury!

- Demarcate and cordon off the working area.
- If there are no persons in the working area, activate the pump.
- If persons enter the working area, switch off the pump immediately.



WARNING

Sharp edges on the impeller!

Sharp edges can form on the impeller. There is a risk of limbs being severed!

- Wear safety gloves to protect against cuts!

Further steps for troubleshooting

If the points listed here do not rectify the fault, contact customer service. Customer service can assist in the following ways:

- Telephone or written support.
- On-site support.
- Inspection and repair at the factory.

Costs may be incurred if you request customer services! Please contact customer services for more information.

Fault indications

For faults, causes and remedies, see the “Fault/warning message” flow diagram in the “Acknowledging errors” chapter and the following tables. The first column of the table lists the code numbers displayed in the event of a fault.



NOTICE

Some faults resolve themselves automatically if the cause of the fault is no longer present.

Key

The following types of errors can occur with differing priorities (1 = lowest priority; 6 = highest priority):

Error type	Description	Priority
A	A fault is present; the pump stops immediately. The fault must be acknowledged at the pump.	6
B	A fault is present; the pump stops immediately. The counter is increased and a timer counts down. After the 6th error event, the error becomes a final fault. The fault must be acknowledged at the pump.	5
C	A fault is present; the pump stops immediately. If the fault persists for more than 5 minutes, the counter is increased. After the 6th error event, the error becomes a final fault. The fault must be acknowledged at the pump. Otherwise the pump restarts automatically.	4
D	The same as fault type A, but with lower priority.	3

Error type	Description	Priority
E	Emergency operation: warning with emergency operation speed and activated SSM	2
F	Warning – pump continues to run	1

Table 24: Error types

15.1 Mechanical faults

Error index	Description
1	Delivery rate too low
2	Leakage in pump housing
3	Shaft seal leakage
4	Pump does not run smoothly or is loud
5	Pump temperature too high

Table 25: Error index

1	2	3	4	5	Cause	Remedy
X					Counter pressure too high	– Check system for contaminants – Reset the duty point
X			X	X	Pump and/or piping not completely filled	– Vent pump and fill suction line
X			X	X	Inlet pressure too low or negative suction head too high	– Correct the fluid level – Minimise resistances in the suction line – Clean filter – Reduce negative suction head by installing the pump lower
X					Pump sucks air or the suction line is leaky	– Replace gasket – Check suction line
X					Supply line or impeller clogged	– Remove clog
X					Air pockets in the piping	– Change pipe routing or install air vent valve in system
X					Speed too low	– Adjust speed
			X		Counter pressure of the pump too low	– Readjust duty point
X			X		The viscosity or density of the fluid is higher than the design value	– Check the pump dimensioning (consult with the manufacturer)
		X	X		The pump is strained	– Correct pump installation
		X	X		Pump unit poorly aligned	– Correct alignment
			X	X	Volume flow too low	– Maintain recommended minimum flow rate
	X				– Housing screws not correctly tightened or gasket defective	– Check tightening torque – Replace gasket
		X			Leak in mechanical seal	– Replace the mechanical seal
			X		Foreign object in the pump	– Clean pump
				X	Pump pumps against closed shut-off device	– Open the shut-off device in the pressure pipe

Table 26: Causes of error and remedies

15.2 Error codes, display

Classification	No.	Error	Cause	Remedy	Error type	
					HV	AC
–	0	No error				
System error	E004	Undervoltage	Mains overloaded	Check electrical installation	C	A
	E005	Overvoltage	Mains voltage too high	Check electrical installation	C	A
	E006	2-phase operation	Missing phase	Check electrical installation	C	A
	E007	**Warning!** Generator operation (flow in flow direction)	The flow is driving the pump impeller; electrical current is being fed back to the mains	Check setting, check system for functionality **Caution!** Prolonged operation can cause damage to the electronic module	F	F
Pump errors	E010	Blocking	Shaft is mechanically blocked	If the blocking has not been removed after 10 seconds, the pump switches off. Check that shaft rotates easily, request customer service	A	A

Classification	No.	Error	Cause	Remedy	Error type	
Motor errors	E020	Excessive winding temperature	Motor overloaded	Allow motor to cool down, check settings, check/correct duty point.	B	A
			Motor ventilation limited	Provide unobstructed air access		
			Water temperature too high	Lower water temperature		
	E021	Motor overload	Duty point outside duty chart	Check/Correct duty point	B	A
			Deposits in the pump	Request customer service		
	E023	Short circuit/ earth leakage	Motor or electronic module defective	Request customer service	A	A
	E025	Faulty contact	Electronic module has no contact to motor	Request customer service	A	A
		Winding interrupted	Motor faulty	Request customer service		
	E026	WSK or PTC interrupted	Motor faulty	Request customer service	B	A
Electronic module error	E030	Excessive electronic module temperature	Limited air supply to the heat sink of the electronic module	Provide unobstructed air access	B	A
	E031	Excessive temperature in hybrid/power unit	Ambient temperature too high	Improve room ventilation	B	A
	E032	Intermediate circuit undervoltage	Voltage fluctuations in the mains	Check electrical installation	F	D
	E033	Intermediate circuit overvoltage	Voltage fluctuations in the mains	Check electrical installation	F	D
	E035	DP/MP: multiple instances of same identity	Multiple instances of same identity	Reassign main and/or partner pump (see section “Twin-head pump installation / y-pipe installation”)	E	E

Classification	No.	Error	Cause	Remedy	Error type	
Communication errors	E050	BMS communication timeout	Bus communication interrupted or timeout, cable break	Check cable connection to building automation	F	F
	E051	Impermissible combination DP/MP	Different pumps	Request customer service	F	F
	E052	DP/MP communication timeout	Cable MP communication defective	Check cable and cable connections	E	E
Electronics errors	E070	Internal communication error (SPI)	Internal electronics error	Request customer service	A	A
	E071	EEPROM error	Internal electronics error	Request customer service	A	A
	E072	Power section/ frequency converter	Internal electronics error	Request customer service	A	A
	E073	Impermissible electronic module number	Internal electronics error	Request customer service	A	A
	E075	Charging relay defective	Internal electronics error	Request customer service	A	A
	E076	Internal transformer defective	Internal electronics error	Request customer service	A	A
	E077	24 V operating voltage for differential pressure sensor defective	Differential pressure sensor defective or connected incorrectly	Check differential pressure sensor connection	A	A
	E078	Impermissible motor number	Internal electronics error	Request customer service	A	A
	E096	Infobyte not set	Internal electronics error	Request customer service	A	A
	E097	Flexpump data record missing	Internal electronics error	Request customer service	A	A
	E098	Flexpump data record invalid	Internal electronics error	Request customer service	A	A
	E121	Short-circuit in PTC motor	Internal electronics error	Request customer service	A	A
	E122	Interruption to NTC power element	Internal electronics error	Request customer service	A	A
	E124	Interruption to NTC electronic module	Internal electronics error	Request customer service	A	A
Impermissible combinatorics	E099	Pump type	Different pump types have been interconnected	Request customer service	A	A

Table 27: Error codes

Additional explanations of error codes

Error E021:

Error 'E021' indicates that more power is required from the pump than is permissible. To ensure that the motor and electronic module do not suffer irreparable damage, the drive protects itself by switching the pump off if an overload lasts more than 1 minute. A pump type that is too small, especially in combination with viscous fluid, or too high a volume flow in the system are the main causes of this error. When this error code is displayed, there is not an error in the electronic module.

Error E070; possibly combined with error E073:

If additional signal or control cables are connected to the electronic module, the effects of EMC (immission/interference resistance) may interrupt communication. This results in error code “E070” being displayed.

You can check this by disconnecting all communication cables installed by the customer in the electronic module. If the fault no longer occurs, there may be an external interference signal on the communication lines that exceeds the applicable standard values. The pump can only return to normal operation once the source of interference is remedied.

15.3 Acknowledge fault

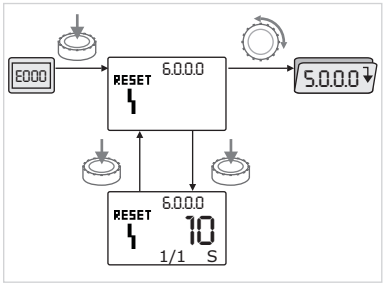

Fig. 48: Navigation in the event of an error



In the event of a fault, the error page is displayed instead of the status page.

You can then navigate as follows:

- 
To change to the menu mode, press the operating button. Menu number <6.0.0.0> flashes on the display. By turning the operating button, it is possible to navigate in the menu as usual.
- 
Press the operating button. Menu number <6.0.0.0> is displayed without flashing. On the units display, the current incidence (x) as well as the maximum incidence of the error (y) are displayed in the format “x/y”. Until the error can be acknowledged, pressing the operating button again will cause a return to menu mode.

NOTICE

A 30-second timeout causes the display to revert to the status page or error page.

Each error code has a separate error counter that counts all incidences of the error within the last 24 hours.
The error counter is reset manually, 24 hours after “Mains ON” or when “Mains ON” is repeated.

15.3.1 Error type A or D

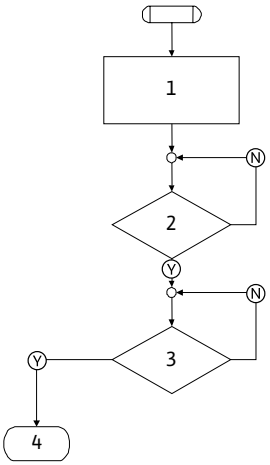

Fig. 49: Error type A, diagram

Program step/query	Contents
1	• Error code is displayed • Motor Off • Red LED On • SSM is activated • Error counter is increased
2	> 1 min?
3	Error acknowledged?
4	End; auto control resumes
Ⓨ	Yes
Ⓝ	No

Table 28: Error type A

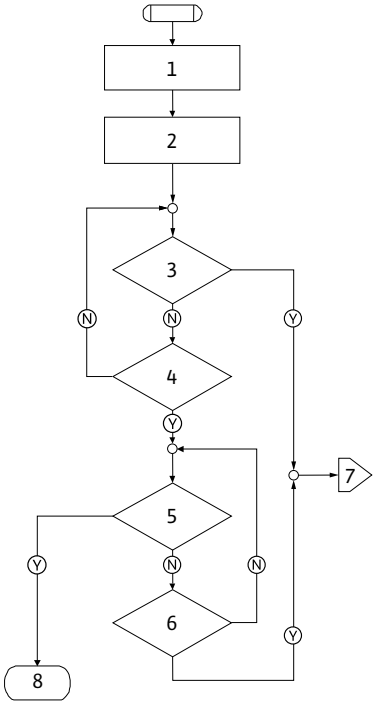

Fig. 50: Error type D, flowchart

Program step/query	Contents
1	• Error code is displayed • Motor Off • Red LED On • SSM is activated
2	• Error counter is increased
3	Is there a new type “A” fault?
4	> 1 min?
5	Error acknowledged?
6	Is there a new type “A” fault?
7	Branching to error type “A”
8	End; auto control resumes
Ⓨ	Yes
Ⓝ	No

Table 29: Error type D

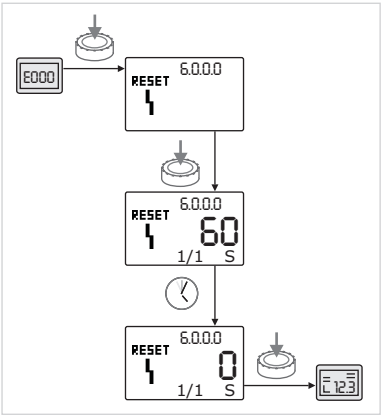

Fig. 51: Acknowledging error type A or D

Acknowledging error types A or D:

- 

  To change to menu mode, press the operating button. Menu number <6.0.0.0> flashes on the display.
- 

  Press the operating button again. Menu number <6.0.0.0> is displayed without flashing. The time remaining before the error can be acknowledged is displayed.
- 

  Wait until the remaining time is up. The waiting time before manual acknowledgement is always 60 seconds for error types A and D.
- 

  Press the operating button again. The error is acknowledged, and the status page is displayed.

15.3.2 Error type B

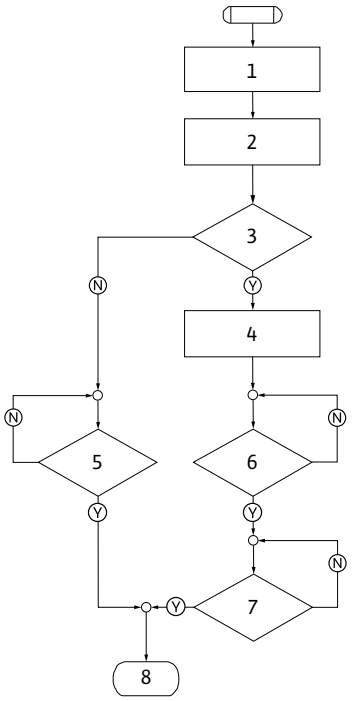

Fig. 52: Error type B, flowchart

Program step/query	Contents
1	• Error code is displayed • Motor Off • Red LED On
2	• Error counter is increased
3	Error counter > 5?
4	• SSM is activated
5	> 5 min?
6	> 5 min?
7	Error acknowledged?
8	End; auto control resumes
Ⓨ	Yes
Ⓝ	No

Table 30: Error type B

Acknowledging error type B:

- 

  To change to menu mode, press the operating button. Menu number <6.0.0.0> flashes on the display.
- 

  Press the operating button again. Menu number <6.0.0.0> is displayed without flashing.

The units display shows the current incidence (x) as well as the maximum incidence of the error (y) in the format “x/y”.

Incidence X < Y

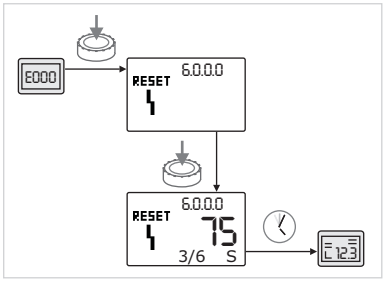

Fig. 53: Acknowledging error type B (X < Y)

If the current incidence of the error is less than the maximum incidence:

- 

  Wait for auto reset time.

The value display shows the remaining time until auto reset of the error in seconds. After the auto reset time has run out, the error will be automatically acknowledged and the status page will be displayed.

NOTICE

The auto reset time can be set in menu number <5.6.3.0> (time input 10 to 300 seconds).

Incidence X = Y

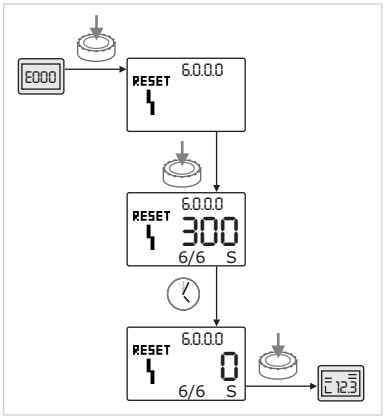

Fig. 54: Acknowledging error type B (X = Y)

If the current incidence of the error is equal to the maximum incidence:

- 

  Wait until the remaining time is up.

The time until manual acknowledgement is always 300 seconds. On the value display, the remaining time until manual acknowledgement of the error is displayed in seconds.

- 

  Press the operating button again. The error is acknowledged, and the status page is displayed.

15.3.3 Error type C

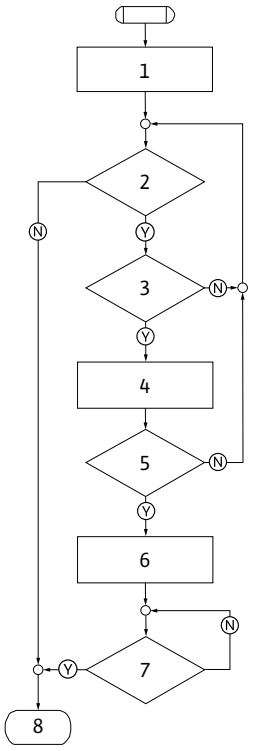

Fig. 55: Error type C, flowchart

Program step/query	Contents
1	• Error code is displayed • Motor Off • Red LED On
2	Error criterion fulfilled?
3	> 5 min?
4	• Error counter is increased
5	Error counter > 5?
6	• SSM is activated
7	Error acknowledged?
8	End; auto control resumes
Ⓨ	Yes
Ⓝ	No

Table 31: Error type C

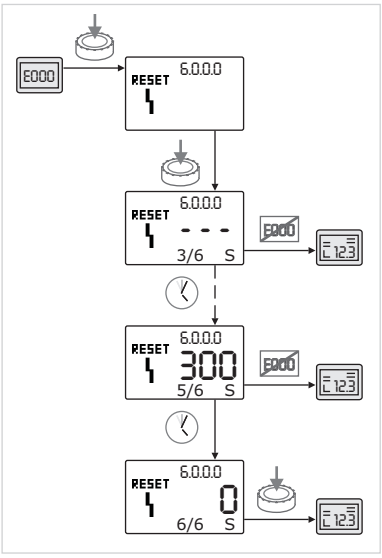

Fig. 56: Acknowledging error type C

Acknowledging error type C:

- 

  To change to menu mode, press the operating button. Menu number <6.0.0.0> flashes on the display.
- 

  Press the operating button again. Menu number <6.0.0.0> is displayed without flashing.

The graphics show "– – –".

The units display shows the current incidence (x) as well as the maximum incidence of the error (y) in the format "x/y". After 300 seconds, the figure for current incidence will increase by one



NOTICE

The error will be acknowledged automatically if the cause of the error is eliminated.

- 

  Wait until the remaining time is up.

If the current incidence (x) is the same as the maximum incidence of the error (y), the error can be acknowledged manually.

- 

  Press the operating button again. The error is acknowledged, and the status page is displayed.

15.3.4 Error type E or F

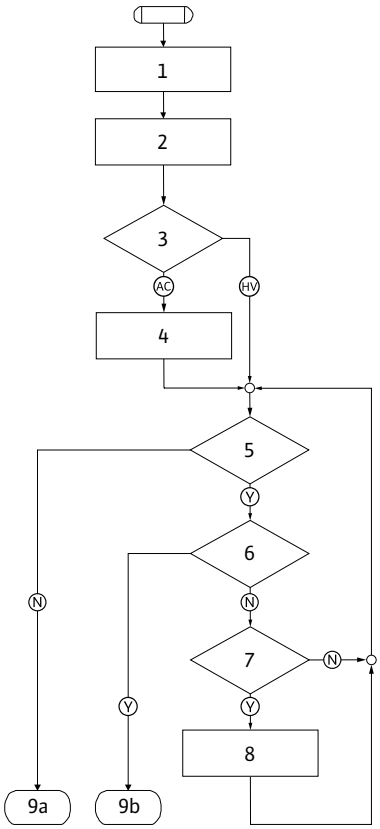

Fig. 57: Error type E, flowchart

Program step/query	Contents
1	• Error code is displayed • Pump goes into emergency operation
2	• Error counter is increased
3	Error matrix AC or HV?
4	• SSM is activated
5	Error criterion fulfilled?
6	Error acknowledged?
7	Error matrix HV and > 30 min?
8	• SSM is activated
9a	End; auto control (twin-head pump) resumes
9b	End; auto control (single pump) resumes
Ⓨ	Yes
Ⓝ	No

Table 32: Error type E

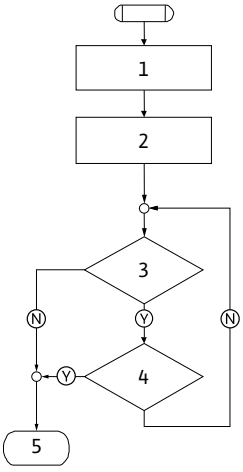

Fig. 58: Error type F, flowchart

Program step/query	Contents
1	• Error code is displayed
2	• Error counter is increased
3	Error criterion fulfilled?
4	Error acknowledged?
5	End; auto control resumes
Ⓨ	Yes
Ⓝ	No

Table 33: Error type F

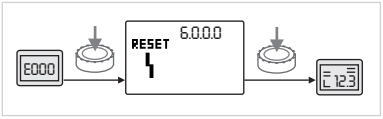

Fig. 59: Acknowledging error type E or F

Acknowledging error type E or F:

- 
  To change to menu mode, press the operating button. Menu number <6.0.0.0> flashes on the display.
- 
  Press the operating button again. The error is acknowledged, and the status page is displayed.

NOTICE

The error will be acknowledged automatically if the cause of the error is eliminated.

16 Factory settings

Menu no.	Name	Factory-configured values
1.0.0.0	Setpoints	• Constant speed: approx. 60% of pump n_{max} • Δp-c: approx. 50% of pump H_{max} • Δp-v: approx. 50% of pump H_{max}
2.0.0.0	Control mode	Δp-c activated
2.3.3.0	Pump	ON
4.3.1.0	Base-load pump	MA
5.1.1.0	Operating mode	Main/standby operation
5.1.3.2	Internal/External pump cycling	internal
5.1.3.3	Pump cycling time interval	24 h
5.1.4.0	Pump enabled/disabled	Approved
5.1.5.0	SSM	Collective fault signal
5.1.6.0	SBM	Collective run signal
5.1.7.0	External off	Collective External off
5.3.2.0	In1 (value range)	0–10 V active
5.4.1.0	In2 active/inactive	OFF
5.4.2.0	In2 (value range)	0-10 V
5.5.0.0	PID parameter	see section “Setting the control mode”
5.6.1.0	HV/AC	HV
5.6.2.0	Emergency operation speed	approx. 60% of pump n_{max}
5.6.3.0	Auto reset time	300 s
5.7.1.0	Display orientation	Display on original orientation
5.7.2.0	Pressure value correction	active
5.7.6.0	SBM function	SBM: Run signal
5.8.1.1	Pump kick active/inactive	ON
5.8.1.2	Pump kick interval	24 h
5.8.1.3	Pump kick speed	n_{min}

Table 34: Factory settings

17 Disposal

17.1 Oils and lubricants

Operating fluids must be collected in suitable containers and disposed of in accordance with the locally applicable guidelines. Wipe up drips immediately!

17.2 Water-glycol mixture

The operating fluid complies with Water Hazard Class 1 of the German Administrative Regulation of Substances Hazardous to Water (VwVwS). When disposing of it, the locally applicable guidelines (e.g. DIN 52900 on propanediol and propylene glycol) must be observed.

17.3 Protective clothing

Used protective clothing must be disposed off in accordance with the locally applicable guidelines.

17.4 Information on the collection of used electrical and electronic products

Proper disposal and appropriate recycling of this product prevents damage to the environment and danger to your personal health.



NOTICE

Disposal in domestic waste is prohibited!

In the European Union this symbol may be included on the product, the packaging or the accompanying documentation. It means that the electrical and electronic products in question must not be disposed of along with domestic waste.

Please note the following points to ensure proper handling, recycling and disposal of the used products in question:

- Hand over these products at designated, certified collection points only.
- Observe the locally applicable regulations!

Please consult your local municipality, the nearest waste disposal site, or the dealer who sold the product to you for information on proper disposal. See www.wilo-recycling.com for more information about recycling.

Subject to change without prior notice!







wilo

Pioneering for You



Local contact at
www.wilo.com/contact

WILO SE
Wilopark 1
44263 Dortmund
Germany
T +49 (0)231 4102-0
T +49 (0)231 4102-7363
wilo@wilo.com
www.wilo.com