Pioneering for You

# Wilo-Atmos GIGA-I/-D/-B



**en** Installation and operating instructions

2230371 • Ed.02/2024-09



Atmos GIGA-I
https://qr.wilo.com/216

Atmos GIGA-D
https://qr.wilo.con/230

Atmos GIGA-B
https://qr.wilo.com/213

Motor data acc. to EU2019/1781
https://qr.wilo.com/motors

**Fig. I: Atmos GIGA-D**

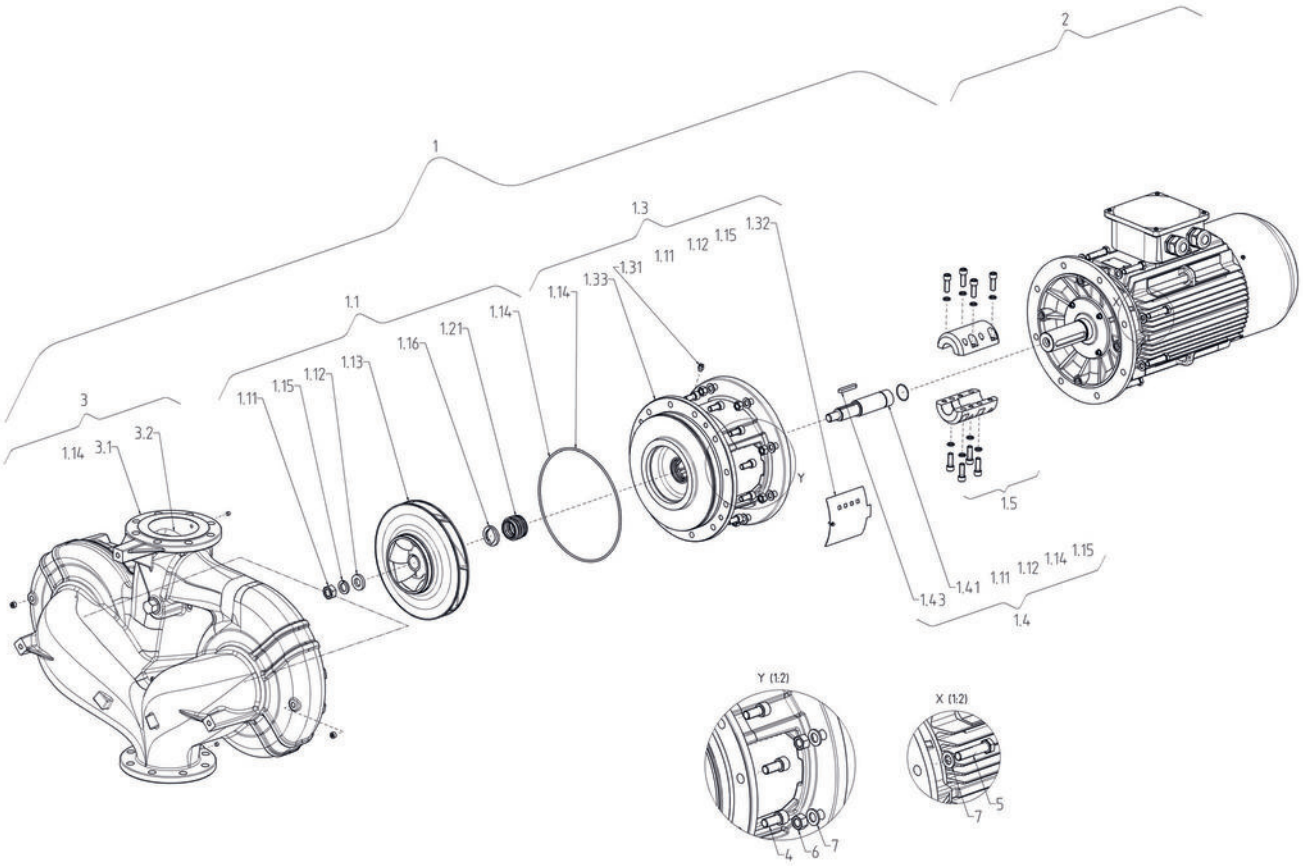


**Fig. II: Atmos GIGA-I**

**Fig. III: Atmos GIGA-B**

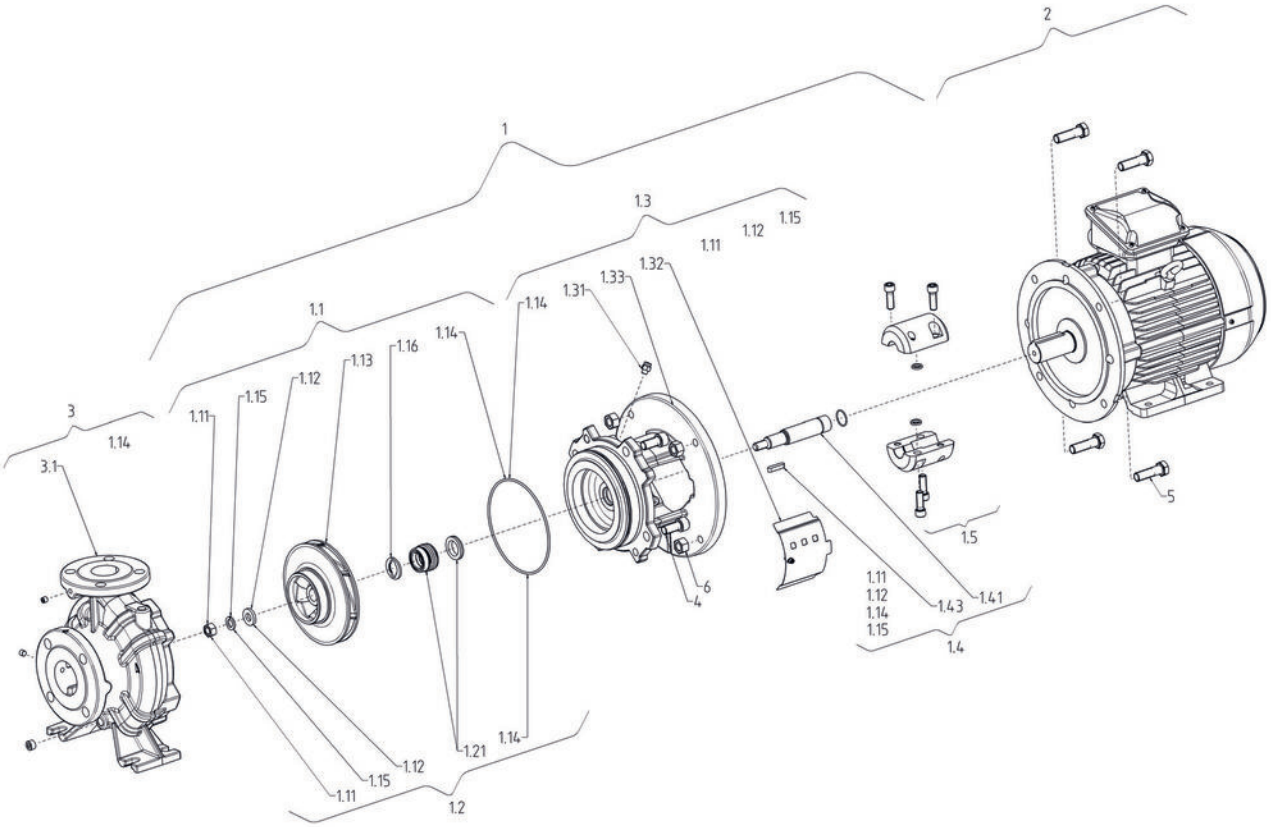


**Fig. IV a: ≤ DN 80**

**Fig. IV b: DN 100 / DN 125**

**Fig. IV c: DN 150 / DN 200**

## Table of contents


**1 General ... 6**
1.1 About these instructions ... 6
1.2 Copyright ... 6
1.3 Subject to change ... 6

**2 Safety ... 6**
2.1 Identification of safety instructions ... 6
2.2 Personnel qualifications ... 7
2.3 Electrical work ... 7
2.4 Transport ... 8
2.5 Installing/dismantling ... 8
2.6 During operation ... 9
2.7 Maintenance work ... 9
2.8 Operator responsibilities ... 10

**3 Transport and storage ... 10**
3.1 Shipping ... 10
3.2 Transport inspection ... 10
3.3 Storage ... 11
3.4 Transport for installation/dismantling purposes ... 12

**4 Intended use and misuse ... 13**
4.1 Intended use ... 13
4.2 Misuse ... 13

**5 Product information ... 14**
5.1 Type key ... 14
5.2 Technical data ... 14
5.3 Scope of delivery ... 16
5.4 Accessories ... 16

**6 Description of the pump ... 16**
6.1 Anticipated noise levels ... 17

**7 Installation ... 17**
7.1 Personnel qualifications ... 17
7.2 Operator responsibilities ... 18
7.3 Safety ... 18
7.4 Permissible forces and torques on the pump flanges ... 19
7.5 Preparing the installation ... 20

**8 Electrical connection ... 24**
8.1 Anti-condensation heater ... 27

**9 Commissioning ... 27**
9.1 Initial commissioning ... 28
9.2 Filling and venting ... 28
9.3 Activation ... 29
9.4 Switching off ... 29
9.5 Operation ... 30

**10 Maintenance ... 30**
10.1 Air supply ... 32
10.2 Maintenance work ... 32

**11 Faults, causes and remedies ... 35**

**12 Spare parts ... 36**

**13 Disposal ... 38**
13.1 Oils and lubricants ... 38
13.2 Information on the collection of used electrical and electronic products ... 38

# 1 General

## 1.1 About these instructions

These installation and operating instructions are an integral part of the device. Read these instructions before commencing any work and keep them in an accessible place at all times. Strict adherence to these instructions is a requirement for the intended use and correct operation of the product.
All specifications and markings on the device must be observed. These installation and operating instructions correspond to the relevant version of the device and the underlying safety standards valid at the time of going to print.

The language of the original operating instructions is German. All other languages of these instructions are translations of the original operating instructions.

## 1.2 Copyright

WILO SE © 2024

The reproduction, distribution and utilisation of this document in addition to communication of its contents to others without express consent is prohibited. Offenders will be held liable for payment of damages. All rights reserved.

## 1.3 Subject to change

Wilo shall reserve the right to change the listed data without notice and shall not be liable for technical inaccuracies and/or omissions. The illustrations used may differ from the original and are intended as an exemplary representation of the product.

# 2 Safety

This chapter contains basic instructions for the individual life cycles of the product. Failure to observe this information carries the following risks:

- Danger to persons from electrical, mechanical and bacteriological effects as well as electromagnetic fields
- Environmental damage from discharge of hazardous substances
- Damage to property
- Failure of important product functions
- Failure of required maintenance and repair procedures

Failure to observe the instructions will result in the loss of any claims for damages.

**The directions and safety instructions in the other sections must also be observed!**

## 2.1 Identification of safety instructions

These installation and operating instructions set out safety instructions for preventing personal injury and damage to property, which are displayed in different ways:

- Safety instructions relating to personal injury start with a signal word and are **preceded by a corresponding symbol**.
- Safety instructions relating to property damage start with a signal word and are displayed **without** a symbol.

### Signal words

- **DANGER!**
  Failure to follow the instructions will result in serious injury or death!
- **Warning!**
  Failure to follow instructions can lead to (serious) injury!

- **Caution!**
  Failure to follow instructions can lead to property damage and possible total loss.
- **Notice!**
  Useful information on handling the product

**Symbols**

These instructions use the following symbols:

 General danger symbol

 Danger of electric voltage

 Warning of hot surfaces

 Warning of high pressure

 Notices

## 2.2 Personnel qualifications

Staff must:

- be instructed about locally applicable regulations governing accident prevention,
- have read and understood the installation and operating instructions.

Personnel must have the following qualifications:

- Electrical work: a qualified electrician must carry out the electrical work.
- Installation/dismantling: The technician must be trained in the use of the necessary tools and fixation materials.
- The product must be operated by persons who have been instructed on how the complete system functions.
- Maintenance work: The technician must be familiar with the use of operating fluids and their disposal.

**Definition of “qualified electrician”**

A qualified electrician is a person with appropriate technical education, knowledge and experience who can identify **and** prevent electrical hazards.

The operator must confirm and ensure the field of authority, the competence and the monitoring of the personnel. If the personnel do not possess the necessary knowledge, they must be trained and instructed. If required, this can be carried out by the product manufacturer at the operator’s request.

## 2.3 Electrical work

- Have electrical work carried out by a qualified electrician.
- When connecting to the mains supply, comply with the nationally applicable guidelines, standards and regulations as well as specifications issued by the local energy supply companies.

- Before commencing work, disconnect the product from the mains and secure it against being switched on again.
- Give staff training on how to establish the electrical connection and the methods for switching off the product.
- Protect the electrical connection with a residual-current device (RCD).
- Observe the technical information in these installation and operating instructions as well as on the rating plate.
- Earth the product.
- Comply with the manufacturer's specifications when connecting the product to electrical switching systems.
- Have a defective connection cable replaced immediately by a qualified electrician.
- Never remove operating elements.
- Comply with the specifications on electromagnetic compatibility when using electronic start-up controllers (e.g. soft starter or frequency converter). If required, consider special measures (shielded cables, filters, etc.).

## 2.4 Transport

- Wear protective equipment:
  - Safety gloves for protection against cuts
  - Safety shoes
  - Sealed safety glasses
  - Safety helmet (when using lifting equipment)
- Only use legally specified and approved lifting slings.
- Select the lifting sling based on the prevailing conditions (weather, slinging point, load etc.).
- Always attach the lifting sling to the designated slinging points (lifting eyes).
- Position the lifting accessory in a way that ensures stability during use.
- When using lifting equipment, a second person must be present to coordinate the procedure if required (e.g. if the operator's field of vision is blocked).
- Persons must not stand underneath suspended loads. Do **not** move suspended loads over workplaces where people are present.

## 2.5 Installing/dismantling

- Wear protective equipment:
  - Safety shoes
  - Safety gloves for protection against cuts
  - Safety helmet (when using lifting equipment)
- Locally applicable laws and regulations on work safety and accident prevention must be complied with.

- The procedure described in the installation and operating instructions for shutting down the product/unit must be strictly observed.
- Disconnect the device from the mains and secure it against being switched on again without authorisation.
- All rotating parts must be at a standstill.
- Close the gate valve in the inlet and in the discharge line.
- Provide adequate aeration in enclosed spaces.
- Make sure that there is no risk of explosion when carrying out any type of welding work or work with electrical devices.

## 2.6 During operation

- The operator must immediately notify the person in charge of every fault or irregularity.
- If hazardous defects occur, the operator must immediately deactivate the device. Hazardous defects include:
  - Malfunction of safety and monitoring devices
  - Damage to housing parts
  - Damage to electrical equipment
- Collect any leakage of fluids and operating fluids immediately and dispose of it according to the locally applicable guidelines.
- Tools and other objects should only be kept in their designated places.

## 2.7 Maintenance work

- Wear protective equipment:
  - Sealed safety glasses
  - Safety shoes
  - Safety gloves for protection against cuts
- Locally applicable laws and regulations on work safety and accident prevention must be complied with.
- The procedure described in the installation and operating instructions for shutting down the product/unit must be strictly observed.
- Only perform the maintenance work described in these installation and operating instructions.
- Only original parts from the manufacturer may be used for maintenance and repairs. The use of any non-original parts releases the manufacturer from any liability.
- Disconnect the device from the mains and secure it against being switched on again without authorisation.
- All rotating parts must be at a standstill.
- Close the gate valve in the inlet and in the discharge line.
- Collect any leakage of fluid and operating fluid immediately and dispose of it according to the locally applicable guidelines.
- Store tools at the designated locations.
- After completing work, reattach all safety and monitoring devices and check that they function properly.

## 2.8 Operator responsibilities

- Provide installation and operating instructions in a language which the personnel can understand.
- Make sure that personnel are suitably trained for the specified work.
- Verify the area of responsibility and individual responsibilities of personnel.
- Provide the necessary protective equipment and make sure that personnel wear it.
- Ensure that safety and information signs mounted on the device are always legible.
- Train personnel with regard to the operating principles of the system.
- Eliminate risks from electrical current.
- Equip hazardous components (extremely cold, extremely hot, rotating, etc.) with a guard to be provided by the customer.
- Remove leakages of hazardous fluids (e.g. explosive, toxic or hot) in such a way that no danger is posed to persons or the environment. Comply with national statutory provisions.
- Keep highly flammable materials at a safe distance from the product.
- Ensure compliance with the regulations for accident prevention.
- Ensure compliance with local directives or general directives [e.g. IEC, VDE, etc.] and instructions from local energy supply companies.

Follow all information that appears on the product and ensure that it remains permanently legible:

- Warning and hazard notices
- Rating plate
- Direction of rotation arrow/symbol for direction of flow
- Labelling of connections

This device can be used by children from 8 years of age as well as people with reduced physical, sensory or mental capacities or lack of experience and knowledge if they are supervised or instructed on the safe use of the device and they understand the dangers that can occur. Children are not allowed to play with the device. Cleaning and user maintenance must not be carried out by children without supervision.

# 3 Transport and storage

### 3.1 Shipping

The pump is secured to a pallet ex works, packaged in a box and protected against dirt and moisture.

### 3.2 Transport inspection

Check delivery immediately for damage and completeness. Defects must be noted on the freight documentation! Defects must be notified to the transport company or the manufacturer immediately on the day of receipt of shipment. Subsequently notified defects can no longer be claimed for.

Only remove the outer packaging at the place of utilisation to ensure that the pump is not damaged during transport.

## 3.3 Storage

**CAUTION**

**Damage due to incorrect handling during transport and storage!**

Protect the product from moisture, frost and mechanical damage during transport and temporary storage.

If available, leave the covers on the pipe connections so that no dirt and other foreign matter can get into the pump housing.

To avoid scoring at the bearings and sticking, turn the pump shaft once a week using a socket wrench.

If a longer storage time is required, contact Wilo for preservation measures.



**WARNING**

**Risk of injury due to incorrect transport!**

If the pump is transported again at a later date, it must be packaged so that it cannot be damaged during transport. Use the original packaging for this or choose equivalent packaging.

### 3.4 Transport for installation/dismantling purposes

**WARNING**

**Risk of personal injury!**

Incorrect transport can lead to personal injury!

- Unload boxes, lathed spaces, pallets or cartons, depending on the size and construction, with forklift trucks or with slings.
- Always lift heavy parts of more than 30 kg with hoisting gear that is in accordance with local regulations.
  - The bearing capacity has to be adapted to the weight!
- Transport the pump using approved lifting gear (block and tackle, crane etc.). Lifting gear must be attached to the pump flanges and, if necessary, to the outer motor diameter.
  - Securing against slipping is required for this!
- When lifting machines or parts with eyelets, only use load hooks or shackles that are in accordance with local safety regulations.
- Transport lugs on the motor, if present, are only for transporting the motor. They are not approved for transporting the complete pump.
- Use a guard if load chains or ropes are guided over or through eyelets or over sharp edges.
- When using a block and tackle or similar hoisting gear, make sure that the load is lifted vertically.
- Prevent the suspended load from swinging.
  - Swinging can be avoided by using a second block and tackle. The direction of pull of both block and tackles must be less than 30° to the vertical.
- Never subject load hooks, eyelets or shackles to bending forces – their load axes have to be in the direction of the tractive forces!
- When lifting, make sure that the load limit of a load rope is reduced for diagonal pulling.
  - The safety and effectiveness of a stranding is best ensured when all load-bearing elements are loaded in the vertical direction to the greatest extent possible. If required, use a lifting arm to which the load ropes can be attached vertically.
- Set up a safety zone in such a way that there is no danger if the load or a part of the load slips or the hoisting gear breaks or tears.
- Never leave a load longer than necessary in a suspended position! Ensure there is no danger to personnel when accelerating and slowing down during the lifting procedure.

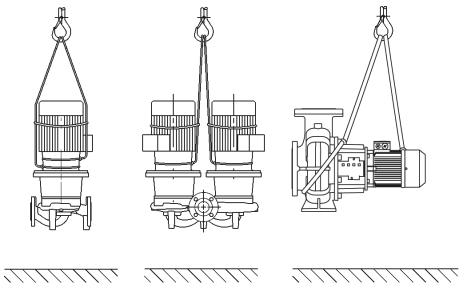

*Fig. 1:* Transporting the pump

For lifting with a crane, the pump must be supported by suitable belts or load ropes, as shown. Place belts or load ropes in loops around the pump, which tighten from the pump's own net weight.

Transport lugs on the motor, if present, are only for guiding when the load is being carried!

**WARNING**

**Damaged transport lugs can break off and cause considerable personal injury.**

- Check the transport lugs before use for damage and secure fixation.

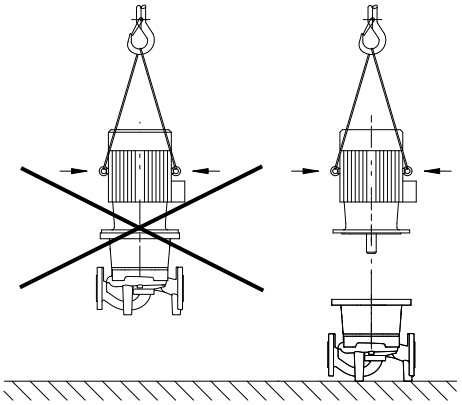

*Fig. 2:* Transporting the motor

Transport lugs on the motor, if present, are only for transporting the motor. They are not approved for transporting the complete pump!

**DANGER**

**Danger of death from falling parts!**

The pump itself and pump parts can have a very high net weight. Falling parts pose a risk of cuts, crush injuries, bruises or impacts, which can be fatal.

- Always use suitable lifting accessories and secure parts against falling.
- Never stand below a suspended load.
- During storage and transport, as well as before all installation and assembly work, ensure that the pump is in a safe position and standing securely.

**WARNING**

**Personal injury due to unsecured installation of the pump!**

The base with the threaded holes is used for fixation only. When standing freely, the pump might not be sufficiently stable.

- Never place the pump unsecured on the pump support feet.

## 4 Intended use and misuse

### 4.1 Intended use

The glanded pumps of the Atmos GIGA-I (in-line single pump), Atmos GIGA-D (in-line twin-head pump) and Atmos GIGA-B (monobloc pump) series are intended for use as circulators in building services.

They may be used for:

- Hot-water heating systems
- Cooling and cold water circulation systems
- Process water systems
- Industrial circulation systems
- Heat carrier circuits

Intended use includes compliance with these instructions as well as the information and markings on the pump.
Any use beyond the intended use is considered misuse and will result in the loss of all liability claims.

### 4.2 Misuse

The operational reliability of the supplied product is only guaranteed for intended use in accordance with chapter "Intended use" of the installation and operating instructions. The limit values must not fall below or exceed those values specified in the catalogue/data sheet.

**WARNING! Misuse of the pump can lead to dangerous situations and damage.**

- Never use fluids other than those approved by the manufacturer.
- Non-permitted substances in the fluid can destroy the pump. Abrasive solids (e.g. sand) increase pump wear.
- Pumps without an Ex rating are not suitable for use in potentially explosive atmospheres.
- Highly flammable materials/fluids should always be kept at a safe distance from the device.
- Never allow unauthorised persons to carry out work.
- Never operate the pump beyond the specified limits of use.
- Never carry out unauthorised conversions.
- Use authorised accessories and genuine spare parts only.

Typical installation locations are technical rooms within the building with other domestic installations. No provision has been made for direct installation of the pump in rooms used for other purposes (residential and work rooms).

Outdoor installation requires a corresponding, special version (motor with anti-condensation heater). See chapter “Anti-condensation heater connection”.

# 5 Product information

## 5.1 Type key

| Example:<br>**Atmos GIGA-I 80/130-5.5/2/6**<br>**Atmos GIGA-D 80/130-5.5/2/6**<br>**Atmos GIGA-B 65/130-5.5/2/6** | |
|---|---|
| Atmos GIGA-I<br>Atmos GIGA-D<br>Atmos GIGA-B | Flange-end pump as in-line single pump<br>Flange-end pump as in-line twin-head pump<br>Flange-end pump as monobloc pump |
| 80 | Nominal diameter DN of the flange connection in mm<br>(with Atmos GIGA-B: discharge side) |
| 130 | Impeller nominal diameter in mm |
| 5.5 | Rated power P2 in kW |
| 2 | Number of poles, motor |
| 6 | 60 Hz version |

*Table 1:* Type key

## 5.2 Technical data

| Property | Value | Note |
|---|---|---|
| Rated speed | Version 50 Hz:<br>• Atmos GIGA-I/-D/-B (2-/4-pole): 2900 rpm or 1450 rpm<br>• Atmos GIGA-I/-D (6-pole): 950 rpm | Depending on pump type |
| Rated speed | Version 60 Hz:<br>• Atmos GIGA-I/-B (2-/4-pole): 3500 rpm or 1750 rpm | Depending on pump type |
| Nominal diameters DN | Atmos GIGA-I: 32 … 200 mm<br>Atmos GIGA-D: 32 … 200 mm<br>Atmos GIGA-B: 32 … 150 mm (discharge side) | |
| Pipe and pressure measurement connections | Flanges PN 16 in accordance with DIN EN 1092-2 with pressure measurement connections Rp ⅛ in accordance with DIN 3858. | |
| Permissible min./max. fluid temperature | -20 °C … +140 °C | Depending on fluid and operating pressure |
| Ambient temperature during operation min./max. | 0 °C … +40 °C | Lower or higher ambient temperatures on request |
| Temperature during storage min./max. | -30 °C … +60 °C | |
| Max. permissible operating pressure | 16 bar (up to + 120 °C)<br>13 bar (up to +140 °C)<br>(Version … -P4: 25 bar) | Version … -P4 (25 bar) as special version at additional charge (availability depends on the pump type) |
| Insulation class | F | |
| Protection class | IP55 | |

| Property | Value | Note |
|---|---|---|
| Permissible fluids | Heating water in accordance with VDI 2035 part 1 and part 2<br>process water<br>cooling/cold water<br>water-glycol mixture up to 40 % vol. | <br>standard version<br>standard version<br>standard version |
| Permissible fluids | Heat carrier oil | Special version or auxiliary equipment (at additional charge) |
| Permissible fluids | Other fluids (on request) | Special version or auxiliary equipment (at additional charge) |
| Electrical connection | 3~400 V, 50 Hz | Standard version |
| Electrical connection | 3~230 V, 50 Hz to 3 kW including | Alternative application for the standard version (no additional charge) |
| Electrical connection | 3~230 V, 50 Hz from 4 kW | Special version or auxiliary equipment (at additional charge) |
| Electrical connection | 3~380 V, 60 Hz | Partially standard version |
| Special voltage/frequency | Pumps with motors with different voltages or other frequencies are available on request. | Special version or auxiliary equipment (at additional charge) |
| PTC thermistor sensor | Standard version from 5.5 kW | Other motor power at additional charge |
| Speed control, pole switchover | Wilo control devices (e.g. Wilo-CC-HVAC system) | Standard version |
| Speed control, pole switchover | Pole switchover | Special version or auxiliary equipment (at additional charge) |
| Explosion protection (EEx e, EEx de) | Up to 37 kW | Special version or auxiliary equipment (at additional charge) |

*Table 2:* Technical data

The detailed motor data as per EU2019/1781 can be consulted via the motor's article number here: https://qr.wilo.com/motors

| Additional information CH | Permissible fluids |
|---|---|
| Heating pumps | Heating water<br>(in accordance with VDI 2035/VdTÜV Tch 1466/**CH: in accordance with SWKI BT 102-01)**<br>...<br>No oxygen binding agents, no chemical sealants (ensure closed system from corrosion perspective according to VDI 2035 **(CH: SWKI BT 102-01)**; rework leaky points). |

**Fluids**

Water-glycol mixtures or fluids with a different viscosity than pure water increase the power consumption of the pump. Only use mixtures with corrosion protection.
**Observe the relevant manufacturer's specifications!**

- Adjust the motor power if required.
- The fluid must be sediment-free.
- Wilo's approval must be obtained for the use of other fluids.

- When using water-glycol mixtures, the use of an S1 variant with a corresponding mechanical seal is generally recommended.
- The compatibility of the standard seal / standard mechanical seal with the fluid is generally given under normal system conditions.
  Special circumstances may require special seals, for example:
  - solids, oils or EPDM-attacking substances in the fluid,
  - air content in the system, etc.

**Observe the safety data sheet for the fluid to be pumped!**

## 5.3 Scope of delivery

- Pump
- Installation and operating instructions

## 5.4 Accessories

Accessories must be ordered separately:

Atmos GIGA-I/-D/-B:

- PTC thermistor tripping unit for switch cabinet installation

Atmos GIGA-I/-D:

- 3 mounting brackets with fixation material for installation on a base

Atmos GIGA-D:

- Blind flanges for repair work

Atmos GIGA-B:

- Supports for installation on a base or baseplate for rated powers of 5.5 kW and higher

For a detailed list, consult the catalogue and spare parts documentation.

# 6 Description of the pump

All the pumps described here are low-pressure centrifugal pumps in compact construction design with a coupled motor. The mechanical seal is maintenance-free. The pumps can be installed both directly as a pipe installation pump in a sufficiently anchored pipe or placed on a foundation base.
The installation options depend on the pump size. Suitable Wilo control devices (e.g. Wilo-CC-HVAC system) can control the power of the pumps continuously. This allows optimisation of the pump output for the demands of the installation and economically efficient pump operation.

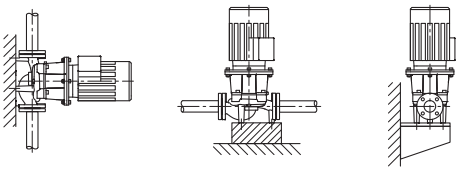

*Fig. 3:* View Atmos GIGA-I

**Version Atmos GIGA-I**

The pump housing has an in-line design, i.e. the flanges on the suction and discharge sides lie along a centre line. All pump housings are provided with pump support feet. Installation on a foundation base is recommended for rated powers of 5.5 kW and higher.

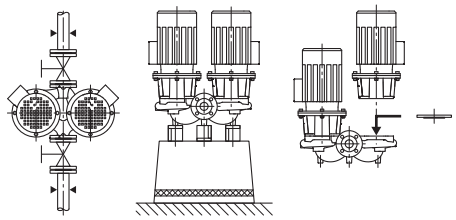

*Fig. 4:* View Atmos GIGA-D

**Version Atmos GIGA-D**

Two pumps are arranged in a shared housing (twin-head pump). The pump housing has an in-line design. All pump housings are provided with pump support feet. Installation on a foundation base is recommended for rated powers of 4 kW and higher.

Only the base-load pump is operated in control mode in connection with a control device. The second pump is available to fulfil full load operation requirements as an auxiliary peak load. The second pump can adopt the reserve function in the event of a fault.

**NOTICE**

Blind flanges (accessories) are available for all pump types/housing sizes of the Atmos GIGA-D series. When replacing the motor impeller unit (motor with impeller and terminal box), a drive can therefore remain in operation.

**NOTICE**

To ensure the standby pump is ready for operation, operate the standby pump every 24 h at least once a week.

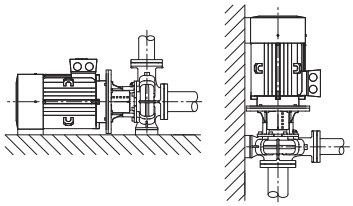

**Version Atmos GIGA-B**

Spiral housing pump with dimensions in accordance with DIN EN 733.

Pump with cast feet on the pump housing. From 5.5 kW motor power: Motors with cast or screwed-on feet.

Installation on a foundation base is recommended for rated powers of 5.5 kW and higher.

*Fig. 5:* View Atmos GIGA-B

### 6.1 Anticipated noise levels

| Motor power [kW] | Measuring surface sound-pressure level Lp, A [dB(A)] [1] | | | | |
|---|---|---|---|---|---|
| | 2900 rpm | | 1450 rpm | | 950 rpm |
| | **Atmos GIGA-I/-D/-B** (-D in individual operation) | **Atmos GIGA-D** (-D in parallel operation) | **Atmos GIGA-I/-D/-B** (-D in individual operation) | **Atmos GIGA-D** (-D in parallel operation) | **Atmos GIGA-I** |
| 0.25 | – | – | 45 | 48 | – |
| 0.37 | – | – | 45 | 48 | – |
| 0.55 | 57 | 60 | 45 | 48 | – |
| 0.75 | 60 | 63 | 51 | 54 | – |
| 1.1 | 60 | 63 | 51 | 54 | – |
| 1.5 | 64 | 67 | 55 | 58 | – |
| 2.2 | 64 | 67 | 60 | 63 | – |
| 3 | 66 | 69 | 55 | 58 | – |
| 4 | 68 | 71 | 57 | 60 | – |
| 5.5 | 71 | 74 | 63 | 66 | – |
| 7.5 | 71 | 74 | 63 | 66 | 65 |
| 11 | 72 | 75 | 65 | 68 | 65 |
| 15 | 72 | 75 | 65 | 68 | – |
| 18.5 | 72 | 75 | 70 | 73 | – |
| 22 | 77 | 80 | 66 | 69 | – |
| 30 | 77 | 80 | 69 | 72 | – |
| 37 | 77 | 80 | 70 | 73 | – |
| 45 | 72 | – | 72 | 75 | – |
| 55 | 77 | – | 74 | 77 | – |
| 75 | 77 | – | 74 | – | – |
| 90 | 77 | – | 72 | – | – |
| 110 | 79 | – | 72 | – | – |
| 132 | 79 | – | 72 | – | – |
| 160 | 79 | – | 74 | – | – |
| 200 | 79 | – | 75 | – | – |
| 250 | 85 | – | – | – | – |

[1] Spatial mean value of sound-pressure levels on a square measuring surface at a distance of 1 m from the surface of the motor.

*Table 3:* Anticipated noise levels (50 Hz)

## 7 Installation

### 7.1 Personnel qualifications

- Installation/dismantling: The technician must be trained in the use of the necessary tools and fixation materials.

## 7.2 Operator responsibilities

- Observe national and regional regulations!
- Observe locally applicable accident prevention and safety regulations of professional and trade associations.
- Provide protective equipment and ensure that the protective equipment is worn by personnel.
- Observe all regulations for working with heavy loads.

## 7.3 Safety



**DANGER**

**Danger of death due to lack of protective devices!**

Due to missing protective devices of the terminal box or near the coupling/motor, electric shock or contact with rotating parts can lead to life-threatening injuries.

- Before commissioning, safety devices such as coupling covers that were removed must be reinstalled!



**DANGER**

**Danger of death from falling parts!**

The pump itself and pump parts can have a very high net weight. Falling parts pose a risk of cuts, crush injuries, bruises or impacts, which can be fatal.

- Always use suitable lifting accessories and secure parts against falling.
- Never stand below a suspended load.
- During storage and transport, as well as before all installation and assembly work, ensure that the pump is in a safe position and standing securely.



**WARNING**

**Hot surface!**

The entire pump can become very hot. There is a risk of burns!

- Allow the pump to cool down before commencing any work!



**WARNING**

**Risk of scalding!**

At high fluid temperatures and system pressures, allow the pump to cool down first and then depressurise the system.

**CAUTION**

**Damage to the pump due to overheating!**

The pump must not be allowed to run dry for more than 1 minute. Dry running causes a build-up of energy in the pump, which can damage the shaft, impeller, and mechanical seal.

- Make sure that the volume flow does not fall below the minimum value $Q_{min}$.

Calculation of $Q_{min}$:

$Q_{min} = 10\ \% \times Q_{max\ pump}$

## 7.4 Permissible forces and torques on the pump flanges

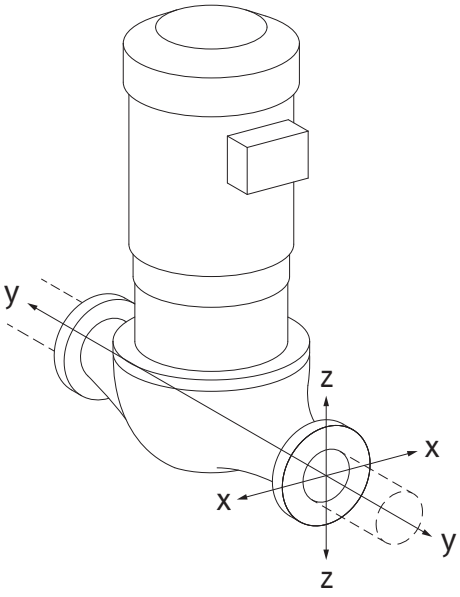


*Fig. 6:* Load case 16A, EN ISO 5199, Appendix B

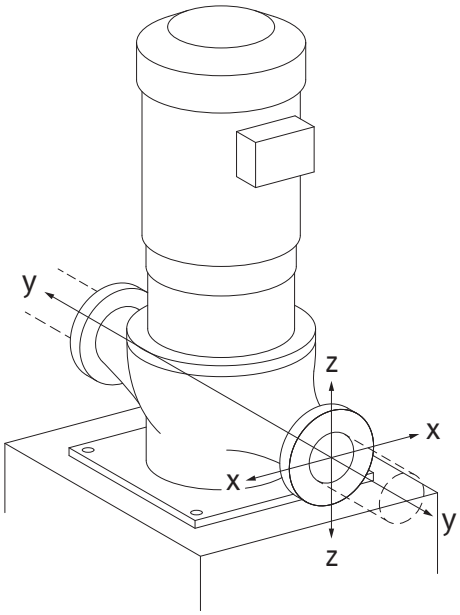


*Fig. 7:* Load case 17A, EN ISO 5199, Appendix B

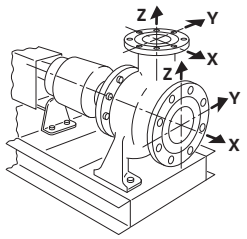


*Fig. 8:* Load case 1A

Pump suspended in pipe, case 16A (Fig. 20)

| DN | Forces F [N] | | | | Torques M [Nm] | | | |
|---|---|---|---|---|---|---|---|---|
| | $F_X$ | $F_Y$ | $F_Z$ | Σ Forces F | $M_X$ | $M_Y$ | $M_Z$ | Σ Torques M |
| **Pressure and suction flange** | | | | | | | | |
| 32 | 450 | 525 | 425 | 825 | 550 | 375 | 425 | 800 |
| 40 | 550 | 625 | 500 | 975 | 650 | 450 | 525 | 950 |
| 50 | 750 | 825 | 675 | 1300 | 700 | 500 | 575 | 1025 |
| 65 | 925 | 1050 | 850 | 1650 | 750 | 550 | 600 | 1100 |
| 80 | 1125 | 1250 | 1025 | 1975 | 800 | 575 | 650 | 1175 |
| 100 | 1500 | 1675 | 1350 | 2625 | 875 | 625 | 725 | 1300 |
| 125 | 1775 | 1975 | 1600 | 3100 | 1050 | 750 | 950 | 1525 |
| 150 | 2250 | 2500 | 2025 | 3925 | 1250 | 875 | 1025 | 1825 |
| 200 | 3000 | 3350 | 2700 | 5225 | 1625 | 1150 | 1325 | 2400 |
| 250 | 3725 | 4175 | 3375 | 6525 | 2225 | 1575 | 1825 | 3275 |
| *Values in acc. with ISO/DIN 5199 – class II (2002) – Appendix B* | | | | | | | | |

*Table 4:* Permissible forces and torques on pump flanges in vertical pipe

Vertical pump on pump feet, case 17A (Fig. 21)

| DN | Forces F [N] | | | | Torques M [Nm] | | | |
|---|---|---|---|---|---|---|---|---|
| | $F_X$ | $F_Y$ | $F_Z$ | Σ Forces F | $M_X$ | $M_Y$ | $M_Z$ | Σ Torques M |
| **Pressure and suction flange** | | | | | | | | |
| 32 | 338 | 394 | 319 | 619 | 300 | 125 | 175 | 550 |
| 40 | 413 | 469 | 375 | 731 | 400 | 200 | 275 | 700 |
| 50 | 563 | 619 | 506 | 975 | 450 | 250 | 325 | 775 |
| 65 | 694 | 788 | 638 | 1238 | 500 | 300 | 350 | 850 |
| 80 | 844 | 938 | 769 | 1481 | 550 | 325 | 400 | 925 |
| 100 | 1125 | 1256 | 1013 | 1969 | 625 | 375 | 475 | 1050 |
| 125 | 1331 | 1481 | 1200 | 2325 | 800 | 500 | 700 | 1275 |
| 150 | 1688 | 1875 | 1519 | 2944 | 1000 | 625 | 775 | 1575 |
| 200 | 2250 | 2513 | 2025 | 3919 | 1375 | 900 | 1075 | 2150 |
| 250 | 2794 | 3131 | 2531 | 4894 | 1975 | 1325 | 1575 | 3025 |
| *Values in acc. with ISO/DIN 5199 – class II (2002) – Appendix B* | | | | | | | | |

*Table 5:* Permissible forces and torques on pump flanges in horizontal pipe

Horizontal pump, axial connector x-axis, case 1A

| DN | Forces F [N] | | | | Torques M [Nm] | | | |
|---|---|---|---|---|---|---|---|---|
| | $F_X$ | $F_Y$ | $F_Z$ | Σ Forces F | $M_X$ | $M_Y$ | $M_Z$ | Σ Torques M |
| **Suction flange** | | | | | | | | |
| 50 | 578 | 525 | 473 | 910 | 490 | 350 | 403 | 718 |
| 65 | 735 | 648 | 595 | 1155 | 525 | 385 | 420 | 770 |
| 80 | 875 | 788 | 718 | 1383 | 560 | 403 | 455 | 823 |
| 100 | 1173 | 1050 | 945 | 1838 | 613 | 438 | 508 | 910 |
| 125 | 1383 | 1243 | 1120 | 2170 | 735 | 525 | 665 | 1068 |
| 150 | 1750 | 1575 | 1418 | 2748 | 875 | 613 | 718 | 1278 |
| 200 | 2345 | 2100 | 1890 | 3658 | 1138 | 805 | 928 | 1680 |

| DN | Forces F [N] | | | | Torques M [Nm] | | | |
|---|---|---|---|---|---|---|---|---|
| | $F_X$ | $F_Y$ | $F_Z$ | Σ Forces F | $M_X$ | $M_Y$ | $M_Z$ | Σ Torques M |
| *Values in acc. with ISO/DIN 5199 – class II (2002) – Appendix B* | | | | | | | | |

*Table 6:* Permissible forces and torques on pump flanges

Horizontal pump, top connector z-axis, case 1A

| DN | Forces F [N] | | | | Torques M [Nm] | | | |
|---|---|---|---|---|---|---|---|---|
| | $F_X$ | $F_Y$ | $F_Z$ | Σ Forces F | $M_X$ | $M_Y$ | $M_Z$ | Σ Torques M |
| **Discharge flange** | | | | | | | | |
| 32 | 315 | 298 | 368 | 578 | 385 | 263 | 298 | 560 |
| 40 | 385 | 350 | 438 | 683 | 455 | 315 | 368 | 665 |
| 50 | 525 | 473 | 578 | 910 | 490 | 350 | 403 | 718 |
| 65 | 648 | 595 | 735 | 1155 | 525 | 385 | 420 | 770 |
| 80 | 788 | 718 | 875 | 1383 | 560 | 403 | 455 | 823 |
| 100 | 1050 | 945 | 1173 | 1838 | 613 | 438 | 508 | 910 |
| 125 | 1243 | 1120 | 1383 | 2170 | 735 | 525 | 665 | 1068 |
| 150 | 1575 | 1418 | 1750 | 2748 | 875 | 613 | 718 | 1278 |
| *Values in acc. with ISO/DIN 5199 – class II (2002) – Appendix B* | | | | | | | | |

*Table 7:* Permissible forces and torques on pump flanges

If not all working loads reach the maximum permitted values, one of these loads may exceed the normal limit value. Provided that the following additional conditions are fulfilled:

- All force and torque components are limited to 1.4 times the maximum permitted value.
- The forces and torques acting on each flange meet the requirements of the compensation equation.

$$\left(\frac{\sum|F|_{\text{effective}}}{\sum|F|_{\text{max. permitted}}}\right)^2 + \left(\frac{\sum|M|_{\text{effective}}}{\sum|M|_{\text{max. permitted}}}\right)^2 \leq 2$$

*Fig. 9:* Compensation equation

$\Sigma F_{effective}$ and $\Sigma M_{effective}$ are the arithmetic sums of the effective values of both pump flanges (inlet and outlet). $\Sigma F_{max.\ permitted}$ and $\Sigma M_{max.\ permitted}$ are the arithmetic sums of the maximum permitted values of both pump flanges (inlet and outlet). The algebraic signs of Σ F and Σ M are not taken into consideration in the compensation equation.

**Influence of material and temperature**

The maximum permissible forces and torques apply for the grey cast iron base material and for an initial temperature value of 20 °C.
For higher temperatures, the values must be corrected as follows depending on the ratio of their modulus of elasticity:

$E_{t,\ EN-GJL} / E_{20,\ EN-GJL}$

$E_{t,\ EN-GJL}$ = Modulus of elasticity grey cast iron at the selected temperature

$E_{20,\ EN-GJL}$ = Modulus of elasticity grey cast iron at 20 °C

## 7.5 Preparing the installation

Check whether the pump complies with the specifications on the delivery note; report any damage or missing parts to Wilo immediately. Check slatted crates/boxes/wrapping for spare parts or accessories that could be included with the pump.



**WARNING**

**Risk of personal injury and property damage due to improper handling!**

- Install only after completion of all welding and soldering work and after the pipeline system has been flushed, if required.
  – Dirt can cause the pump to fail.

***Installation location***

- The pump must be protected from the weather and installed in a frost-/dust-free, well ventilated, oscillation-isolated environment that is not hazardous. The pump must not be installed outdoors! Observe the specifications in “Intended use” section!
- Mount the pump in a readily accessible place. This makes it easier to complete inspections, maintenance (e.g. mechanical seal change) or replacement in the future.
  Observe the minimum axial distance between the wall and the fan cover of the motor: free removal dimension of at least 200 mm + diameter of the fan cover.
- Install a device for attaching hoisting gear above the set-up site of the pumps. Total weight of the pump: see catalogue or data sheet.

***Base***

## CAUTION

**A faulty foundation or incorrect installation of the unit!**

A faulty foundation or incorrect installation of the unit on the foundation can lead to defects of the pump.

• These defects are not covered by the warranty.

• Never set up the pump unit on unfortified surfaces or surfaces that cannot bear loads.

## NOTICE

For some pump types, simultaneous separation of the foundation block itself from the building structure by means of an elastic intermediate layer (e.g. cork or MAFUND® plate) is required for vibration-insulated installation.

## WARNING

**Personal injury and property damage due to improper handling!**

Transport lugs mounted on the motor housing can tear out if the load is too heavy. This can lead to serious injuries and damage to the product!

- Only lift the pump with approved lifting gear (e.g. block and tackle, crane). See also chapter “Transport and storage”.
- Transport lugs mounted on the motor housing are only permitted for transporting the motor!

## NOTICE

**Simplify subsequent work on the unit!**

- To ensure the entire unit does not have to be emptied, install shut-off valves upstream and downstream of the pump.

If need be, the necessary non-return valves are to be provided.

**Condensate drainage**

- When using the pump in air conditioning or cooling systems:
  Drain any condensate via the existing drilled holes on pump lanterns and motor. A drainage line can be connected to the drainage holes of the pump lanterns to drain leaking fluids.
  The motors are provided with condensate drainage holes that have been closed at the factory.
  Open the condensate drainage holes if necessary to drain condensate
  Close the condensate drainage holes again afterwards.
- Installation position:
  All installation positions except for “motor facing down” are allowed.
- The air vent valve (Fig. I/II/III, Item 1.31) must always point upward.

**Atmos GIGA-I/-D**

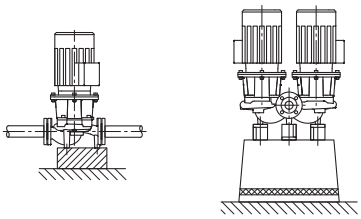

*Fig. 10:* Atmos GIGA-I/-D

## NOTICE

The installation position with horizontal motor shaft is permitted for the Atmos GIGA-I and Atmos GIGA-D series only up to a motor power of 15 kW.
Motor support is not required.
For motor powers > 15 kW, only install in a position with vertical motor shaft.

**Atmos GIGA-B**

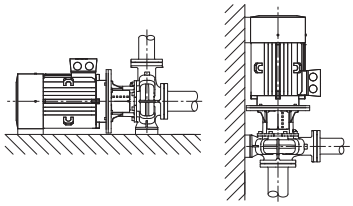

*Fig. 11:* Atmos GIGA-B

## NOTICE

For monobloc pumps larger than 30 kW, only horizontal installation is permissible.
Install monobloc pumps of the Atmos GIGA-B series on adequate foundations or mounting brackets (Fig. 7).
The motor must be supported from a motor power of 18.5 kW. See installation examples Atmos GIGA-B.

For motor powers of 37 kW 4-pole and 45 kW 2-pole, the pump housing and motor must be supported. Suitable supports from the Wilo accessories range can be used for this purpose.

When installing the motor in a vertical position, the pump housing foot and motor housing foot must be screwed on. This must be done stress-free.

Unevenness between motor and pump housing feet must be levelled out for stress-free installation.

## NOTICE

The motor terminal box must not face downward. If necessary, the motor or motor impeller unit can be rotated once the hexagon head screws have been loosened. While rotating the motor or motor impeller unit, ensure that the housing O-ring seal is not damaged.

Installation examples Atmos GIGA-B:

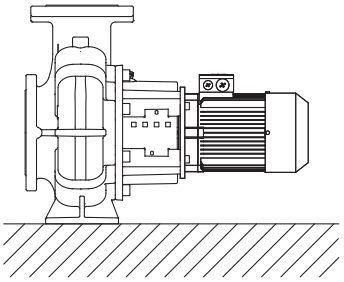

No support required

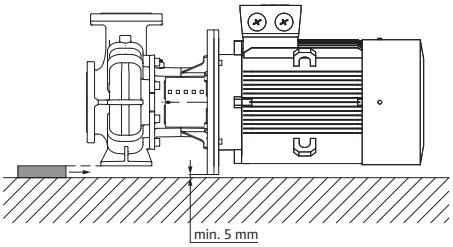


Pump housing supported

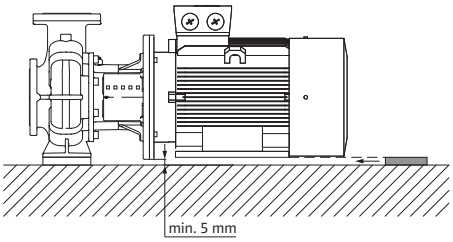


Motor supported

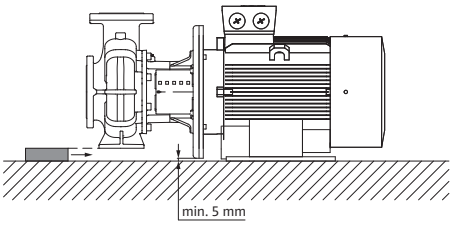


Pump housing supported, motor attached to the base

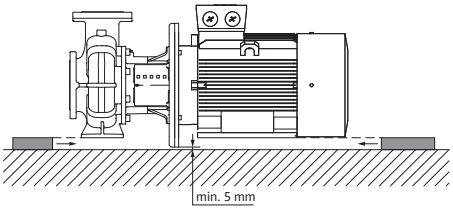


Pump housing and motor supported

## NOTICE

When pumping from an open tank (e.g. cooling tower), ensure that there is always a sufficient liquid level above the pump's suction port. This prevents the pump from running dry. The minimum inlet pressure must be observed.

## NOTICE

In the case of insulated systems, only the pump housing may be insulated. Never insulate the lantern and motor.

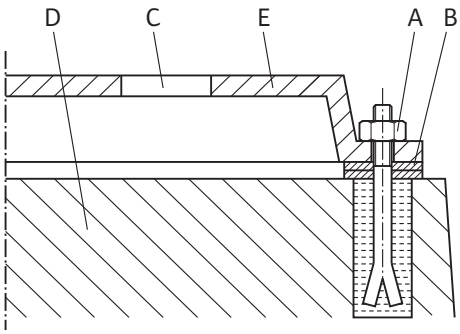


*Fig. 12:* Example of a foundation screwed connection

**Example of a foundation screwed connection**

- Align the complete unit when installing it on the foundation with the help of the spirit level (at the shaft/discharge port).
- Always put the washers (B) to the left and right directly at the fixation material (e.g. stone bolts (A)) between the baseplate (E) and foundation (D).
- Evenly and firmly tighten the fixation material.
- For distances > 0.75 m, support the baseplate at the centre between the fixation elements.

***Connection of the pipes***

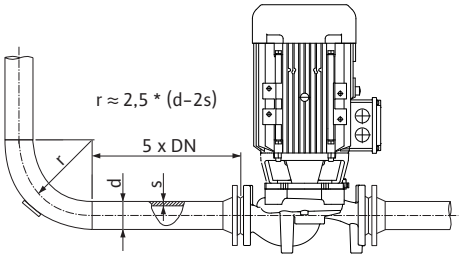


*Fig. 13:* Settling section upstream and downstream of the pump

## CAUTION

**Risk of damage due to incorrect handling!**

The pump may never be used as a fixed point for the pipe.

- The present NPSH of the system always has to be greater than the required NPSH of the pump.
- The forces and torques being exerted by the pipeline system on the pump flange (e.g., by warping, thermal expansion) may not exceed the permitted forces and torques.
- The pipes and pump must be free of mechanical stress when installed.
- The pipes must be fixed in such a way that the pump does not have to support the weight of the pipes.
- The suction line is to be kept as short as possible. Lay the suction line to the pump so that it continuously rises while the inlet falls. Avoid possible air entry points.
- If a dirt trap in the suction line is required, its free cross-section has to be 3 – 4 times the cross-section of the pipe.
- For short pipes, the nominal diameters must be at least those of the pump connections. For long pipes, determine the most economical nominal diameter in each case.
- To avoid higher pressure losses, make adapters for larger nominal diameters with an extension angle of approx. 8.

## NOTICE

**Avoid flow cavitation!**

- A settling section must be provided upstream and downstream of the pump in the form of a straight pipe. The length of the settling section must be at least 5 times the nominal diameter of the pump flange.

- Remove the flange covers at the suction and discharge ports of the pump before attaching the piping.

***Final check***

Check the alignment of the unit again according to the “Installation” section.

- Tighten the foundation bolts if necessary.
- Check all connections for correctness and function.
- It must be possible to turn the coupling/shaft by hand.

Do not allow the coupling/shaft to turn:

- Release the coupling and re-tighten with the prescribed torque.

In case this measure is not successful:

- Remove the motor (see “Changing the motor” section).
- Clean the motor centring and flange.
- Reinstall the motor.

## 8 Electrical connection



### DANGER

**Risk of fatal injury due to electrical current!**

**The use of a thermal overload protection is recommended!**

Improper conduct when carrying out electrical work can lead to death due to electric shock!

- Electrical connection may only be carried out by a qualified electrician and in accordance with the applicable regulations!
- Adhere to accident prevention regulations!
- Before beginning work on the product, make sure that the pump and drive are electrically isolated.
- Make sure that no one can turn on the power supply again before work is completed.
- Electrical machines must always be earthed. Earthing must be appropriate for the drive and meet the relevant standards and regulations. Earth terminals and fixation elements must be suitably dimensioned.
- Observe the installation and operating instructions for the accessories!



### DANGER

**Danger of death due to contact voltage!**

Touching live parts will result in serious injuries or death!
Even when it is disconnected, high contact voltages can still occur in the terminal box due to non-discharged capacitors. Therefore, work on the terminal box module must not be started until 5 minutes have elapsed!

- Disconnect all poles of the supply voltage and secure against reconnection!
- Check whether all connections (including potential-free contacts) are voltage-free!
- Never insert objects (e.g. nail, screwdriver, wire) into openings on the terminal box!
- Reinstall removed safety devices (such as terminal box cover)!

### CAUTION

**Material damage due to improper electrical connection!**
**An inadequate mains design can lead to system failures and cable fires due to mains overload!**

- When designing the mains supply with regard to the used cable cross-sections and fuses, pay special attention to the fact that, in multi-pump operation, it is possible that all pumps operate at the same time for short periods.

***Preparation/notes***

- Establish electrical connection via a fixed connection cable with a connector device or an all-pole switch with at least 3 mm contact opening width (VDE 0730/Part 1).
- To protect against leakage water and for strain relief to the threaded cable gland, use a connection cable with sufficient outer diameter and screw them so they are tight enough.
- The cables near the screwed connection are to be bent to form a drain loop, to drain any accumulated drips.
  Position the threaded cable gland and, by laying the cables accordingly, ensure that no drips are able to run into the terminal box. Unoccupied threaded cable glands must remain closed with the plugs provided by the manufacturer.
- Lay the connection cable in such a way that it touches neither the pipes nor the pump.
- Use a heat-resistant connection cable if fluid temperatures exceed 90 °C.
- The current type and voltage of the mains connection must correspond to the specifications on the rating plate.
- Fuse protection on mains side: Dependent on rated motor current.

- When connecting an external frequency converter, observe the corresponding installation and operating instructions! If necessary, carry out additional earthing due to higher leakage currents.
- The motor must be secured against overloading by a motor protection switch or by the PTC thermistor tripping unit (accessory).

**Standard pumps on external frequency converters**

If standard pumps are used on external frequency converters, the following aspects have to be considered regarding the insulation system and current-insulated bearings:

**400 V power supply**

The motors used by Wilo for glanded pumps are suitable for operation on external frequency converters.
It is strongly recommended to set up and operate the installation in compliance with IEC TS 60034-25:2014. Due to the rapidly advancing development in the field of frequency converters, WILO SE does not guarantee fault-free use of the motors on third-party converters.

**500 V/690 V power supply**

The motors which Wilo uses as standard for glanded pumps are not suited to be used on external frequency converters with 500 V/690 V.
For use in 500 V or 690 V mains, motors with appropriate winding and reinforced insulation system are available. This must be explicitly stated when ordering. The overall installation must comply with IEC TS 60034-25:2014.

## NOTICE

The connection diagram for electrical connections is in the terminal box cover.

**Setting the motor protection switch:**

- Set according to the rated motor current specified on the rating plate of the motor.
  Y-Δ starting: If the motor protection switch is switched in the supply line to a Y-Δ contactor combination, adjust the switch as for direct starting. If the motor protection switch is switched in a thread of the motor supply line (U1/V1/W1 or U2/V2/W2), set the motor protection switch to the value 0.58 x rated motor current.
- From 5.5 kW, the motor is equipped with PTC thermistor sensors.
- Connect the PTC thermistor sensors to the PTC thermistor tripping unit.

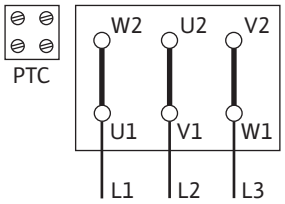


*Fig. 14:* Δ connection

## CAUTION

**Risk of property damage!**

Only a maximum voltage of 7.5 V DC may be applied to the PTC thermistor sensor terminals. A higher voltage will destroy the PTC thermistor sensor.

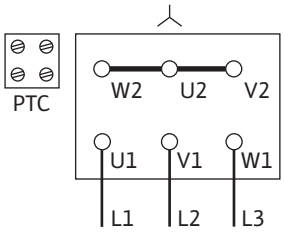


*Fig. 15:* Y-connection

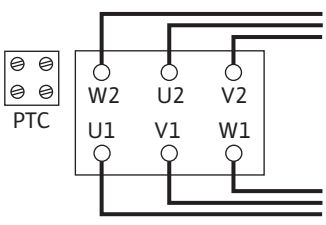


*Fig. 16:* Y-Δ-connection

- The mains connection is dependent on the motor power P2, mains voltage and activation type. Refer to the following table and Fig. 14, 15 and 16 for the required connection of the connecting bridges in the terminal box.
- When connecting automatic switchgears, observe the corresponding installation and operating instructions.

| Activation type | Motor power P2 ≤ 3 kW | | Motor power P2 ≥ 4 kW |
|---|---|---|---|
| | Mains voltage 3~ 230 V | Mains voltage 3~ 400 V | Mains voltage 3~ 400 V |
| Direct | Δ-connection (Fig. 14) | Y-connection (Fig. 15) | Δ-connection (Fig. 14 above) |

| Activation type | Motor power P2 ≤ 3 kW | | Motor power P2 ≥ 4 kW |
|---|---|---|---|
| | Mains voltage 3~ 230 V | Mains voltage 3~ 400 V | Mains voltage 3~ 400 V |
| Y-Δ start | Remove connection bridges. (Fig. 16) | Not possible | Remove connection bridges. (Fig. 16) |

*Table 8:* Terminal assignment

**NOTICE**

Use of soft starters is recommended to limit the starting current and preventing tripping of overcurrent protection devices.

| Terminal | Tightening torque in Nm | Screw |
|---|---|---|
| L1/L2/L3 | 1.8 ± 0.2 | M4 |
| L1/L2/L3 | 2.2 ± 0.2 | M5 |
| L1/L2/L3 | 3.8 ± 0.3 | M6 |
| L1/L2/L3 | 6.5 ± 0.5 | M8 |
| L1/L2/L3 | 10.0 ± 1.0 | M10 |
| The torques apply if no other value is specified in the terminal box. | | |

*Table 9:* Tightening torques of terminal board

## 8.1 Anti-condensation heater

We recommend an anti-condensation heater for motors which, due to climatic conditions, are at risk of condensation. These are, for example, idle motors in humid environments or motors that are exposed to large temperature fluctuations. Motors equipped with an anti-condensation heater at the factory can be ordered as special versions. The anti-condensation heater is used to protect the motor windings against condensation water inside the motor.

- The anti-condensation heater is connected to the terminals HE/HE in the terminal box (connection voltage: 1~230 V/50 Hz).

**CAUTION**

**Risk of damage due to incorrect handling!**

The anti-condensation heater may not be switched on during motor operation.

# 9 Commissioning

- Electrical work: a qualified electrician must carry out the electrical work.
- Installation/dismantling: The technician must be trained in the use of the necessary tools and fixation materials.
- The product must be operated by persons who have been instructed on how the complete system functions.

**DANGER**

**Danger of death due to lack of protective devices!**

Due to missing protective devices of the terminal box or in the range of the coupling/motor, electric shock or contact with rotating parts can lead to life-threatening injuries.

- Before commissioning, safety devices such as terminal box covers or coupling covers that were removed must be reinstalled!
- An authorised technician must check the functionality of the safety devices on the pump and motor prior to commissioning!



**WARNING**

**Danger of injury due to fluid shooting out and components coming loose!**

Not installing the pump/system correctly can lead to serious injuries during commissioning!

- Carry out all work carefully!
- Keep a safe distance during commissioning!
- Always wear protective clothing, safety gloves and safety glasses when working.



**NOTICE**

It is recommended to have the pump commissioned by the Wilo customer service.

## 9.1 Initial commissioning

***Preparation***

The pump has to reach ambient temperature before commissioning.

- Check whether the shaft can be rotated without any grinding. In case the impeller is blocked or grinds, loosen the coupling screws and tighten them again with the specified torque. (See table on screw tightening torques).
- Fill and vent the system appropriately.

## 9.2 Filling and venting

**CAUTION**

**Dry running will destroy the mechanical seal! It may cause leakage.**

- Ensure that a dry run of the pump is not possible.



**WARNING**

**There is a risk of burns or freezing upon coming into contact with the pump/system.**

Depending on the pump and system operating conditions (fluid temperature), the entire pump can become very hot or very cold.

- Keep a safe distance during operation!
- Allow the system and pump to cool down to room temperature!
- Always wear protective clothing, safety gloves and safety glasses when working.



**DANGER**

**Danger of personal injury and material damage due to extremely hot or extremely cold pressurised fluid!**

Depending on the temperature of the fluid, when the venting device is opened completely, **extremely hot** or **extremely cold** fluid may escape in liquid or vapour form. Fluid may shoot out at high pressure depending on the system pressure.

- Always exercise caution when opening the venting device.

Fill and vent the system correctly.

1. To do this, loosen the air vent valves and vent the pump.
2. After venting the pump, tighten the air vent valves again so that no more water can escape.

**NOTICE**

- Always keep to the minimum pressure!

- To avoid cavitation noises and damage, a minimum inlet pressure must be guaranteed at the suction port of the pump. The minimum inlet pressure depends on the operating situation and the pump's duty point. Accordingly, the minimum pressure must be determined.
- The main parameters for defining the minimum inlet pressure are the NPSH value of the pump at its duty point and the vapour pressure of the fluid. The NPSH value can be found in the technical documentation of the respective pump type.

1. By briefly switching on, check whether the direction of rotation agrees with the arrow on the fan cover. If the direction of rotation is incorrect, proceed as follows:

- For direct starting: Swap two phases on the motor terminal board (e.g. L1 for L2).
- For Y-Δ starting:
  Swap the thread start and thread end of two windings on the motor terminal board (e.g. V1 for V2 and W1 for W2).

## 9.3 Activation

- The unit may only be switched on when the shut-off device on the discharge side is closed! Only after full speed has been reached may the shut-off device be slowly opened and be adjusted to the duty point.

The unit must run smoothly and free of vibration.
During the running-in period and normal operation of the pump, a small amount of leakage, i.e. a few drops, is normal. A visual inspection is required from time to time. If there is clearly detectable leakage, the gasket must be replaced.



**DANGER**

**Danger of death due to lack of protective devices!**

Due to missing protective devices of the terminal box or near the coupling/motor, electric shock or contact with rotating parts can lead to life-threatening injuries.

- Immediately after the conclusion of all work, all the provided safety and protection equipment items must be properly installed and put into operation!

## 9.4 Switching off

- Close the shut-off device in the discharge line.

**NOTICE**

If a non-return valve is installed in the discharge line, and there is counterpressure, the shut-off device can remain open.

**CAUTION**

**Risk of damage due to incorrect handling!**

When switching off the pump, the shut-off device in the inlet pipe must not be closed.

- Switch off the motor and allow it to coast down completely. Ensure the coasting is smooth.
- For longer downtimes, close the shut-off device in the inlet pipe.
- For longer periods of non-use and/or danger of freezing, drain the pump and secure it against freezing.
- After removing the pump, store it in a dry and dust-free place.

## 9.5 Operation

### NOTICE

The pump must always run smoothly and vibration-free and must not be operated in conditions other than those specified in the catalogue/data sheet.



### DANGER

**Danger of death due to lack of protective devices!**

Due to missing protective devices of the terminal box or near the coupling/motor, electric shock or contact with rotating parts can lead to life-threatening injuries.

- Immediately after the conclusion of all work, all the provided safety and protection equipment items must be properly installed and put into operation!



### WARNING

**There is a risk of burns or freezing upon coming into contact with the pump/system.**

Depending on the pump and system operating conditions (fluid temperature), the entire pump can become very hot or very cold.

- Keep a safe distance during operation!
- Allow the system and pump to cool down to room temperature!
- Always wear protective clothing, safety gloves and safety glasses when working.

The pump can be switched on and off in different ways. This depends on the different operating conditions and the degree of automation of the installation. Observe the following points:

**Stop procedure:**

- Prevent return flow to the pump.
- Do not work too long with too low a volume flow.

**Start procedure:**

- Make sure that the pump is completely filled up.
- Do not work too long with too low a volume flow.
- Larger pumps require a minimum flow rate amount to operate properly.
- Operating against a closed shut-off device can lead to overheating in the centrifugal chamber and to damage of the shaft seal.
- Ensure a continual flow to the pump with a sufficiently large NPSH.
- Prevent insufficient counter pressure leading to a motor overload.
- To avoid significant increases in motor temperature and excessive load on the pump, coupling, motor, gaskets and bearings, perform no more than 10 switch-on procedures per hour.

**Twin-head pump operation**

To ensure the standby pump is ready for operation, operate the standby pump every 24 h at least once a week.

## 10 Maintenance

- Maintenance work: The technician must be familiar with the use of operating fluids and their disposal.
- Electrical work: a qualified electrician must carry out the electrical work.
- Installation/dismantling: The technician must be trained in the use of the necessary tools and fixation materials.

It is recommended to have the pump serviced and checked by the Wilo customer service.



## DANGER

**Danger of death due to electrical current!**

Improper conduct when carrying out electrical work can lead to death due to electric shock!

- Any work on electrical devices may only be carried out by a qualified electrician.
- Before carrying out any work, disconnect the unit from the power supply and secure it against accidental switch-on.
- Any damage to the pump connection cable should only ever be rectified by a qualified electrician.
- Follow the installation and operating instructions for the pump, level control device and other accessories.
- Never poke around in the motor openings or insert anything into them.
- After completing the work, refit previously dismantled protective devices, for example, terminal box covers or coupling covers.



## DANGER

**Danger of death from falling parts!**

The pump itself and pump parts can have a very high net weight. Falling parts pose a risk of cuts, crush injuries, bruises or impacts, which can be fatal.

- Always use suitable lifting accessories and secure parts against falling.
- Never stand below a suspended load.
- During storage and transport, as well as before all installation and assembly work, ensure that the pump is in a safe position and standing securely.



## DANGER

**Danger of death due to ejected tools!**

The tools used during maintenance work on the motor shaft can be thrown away if they come into contact with rotating parts. Injuries and even death are possible!

- The tools used during maintenance work must be removed completely before the pump is started up!



## WARNING

**There is a risk of burns or freezing upon coming into contact with the pump/system.**

Depending on the pump and system operating conditions (fluid temperature), the entire pump can become very hot or very cold.

- Keep a safe distance during operation!
- Allow the system and pump to cool down to room temperature!
- Always wear protective clothing, safety gloves and safety glasses when working.



## NOTICE

For all installation work, use the forked spacer to set the correct impeller position in the pump housing!

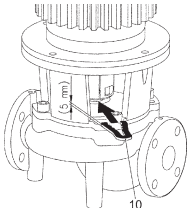

Forked spacer for setting work

### 10.1 Air supply

Check the air supply to the motor housing at regular intervals. Dirt impairs the cooling of the motor. If necessary, remove dirt and restore unrestricted air supply.

### 10.2 Maintenance work

**DANGER**

**Danger of death from falling parts!**

Falling pumps or individual pump components may result in life-threatening injuries!

- During installation work, secure pump components against falling down with suitable lifting gear.

**DANGER**

**Risk of fatal electrical shock!**

Check for absence of voltage and cover or cordon off adjacent live parts.

### 10.2.1 On-going maintenance

Replace all gaskets that have been removed for maintenance.

### 10.2.2 Replacing the mechanical seal

There may be a slight amount of drip leakage during the running-in period. Even during normal operation of the pump, it is normal for there to be slight leakage with the occasional formation of drops.
In addition, carry out a visual inspection regularly. If leakage is clearly visible, replace the gasket.
Wilo offers a repair kit which contains the necessary parts for replacement.

**Dismantling:**

**WARNING**

**Risk of scalding!**

At high fluid temperatures and system pressures, allow the pump to cool down first and then depressurise the system.

1. Disconnect the system from the power supply and secure it against being switched on again without authorisation.
2. Make sure it is not live.
3. Earth the work area and short-circuit.
4. Close the shut-off devices upstream and downstream of the pump.
5. Depressurise the pump by opening the air vent valve (Fig. I/II/III, Item 1.31).

**NOTICE**

For all following work, observe the screw tightening torque specified for the respective thread type (table on screw tightening torques)!

6. Disconnect the motor and mains connection cables if the cable is too short for dismantling the drive.
7. Remove the coupling guard (Fig. I/II/III, Item 1.32) using a suitable tool (e.g. screwdriver).
8. Loosen the coupling screws (Fig. I/II/III, Item 1.5) on the coupling unit.

9. Loosen the motor fastening screws (Fig. I/II/III, Item 5) on the motor flange and lift the drive off the pump with suitable hoisting gear.
10. Remove the lantern unit with coupling, shaft, mechanical seal and impeller from the pump housing by loosening the lantern fastening screws (Fig. I/II/III, Item 4).
11. Loosen the impeller fastening nut (Fig. I/II/III, Item 1.11), remove the conical spring washer underneath (Fig. I/II/III, Item 1.12) and pull the impeller (Fig. I/II/III, Item 1.13) off the pump shaft.
12. Remove the shim (Fig. II, Item 1.16) and if required the key (Fig. II, Item 1.43).
13. Pull the mechanical seal (Fig. I/II/III, Item 1.21) off the shaft.
14. Pull the coupling (Fig. I/II/III, Item 1.5) with the pump shaft out of the lantern.
15. Thoroughly clean the sliding/seat surfaces of the shaft. If the shaft is damaged, also replace the shaft.
16. Remove the stationary ring on the mechanical seal with the collar from the lantern flange and the O-ring (Fig. I/II/III, Item 1.14). Clean the gasket seats.

**Installation**

1. Press a new mechanical seal stationary ring with collar into the gasket seat of the lantern flange. A commercially available dishwashing liquid can be used as a lubricant.
2. Install a new O-ring in the groove of the O-ring seat of the lantern.
3. Check the coupling sliding surfaces, if necessary, clean and slightly oil them.
4. Pre-install the coupling shells on the pump shaft with spacer shims inserted in between and insert the pre-assembled coupling shaft unit carefully into the lantern.
5. Pull a new mechanical seal onto the shaft. A commercially available dishwashing liquid can be used as a lubricant (if required, insert the key and the shim again).
6. Install the impeller with washer(s) and nut, countering at the impeller's outer diameter while doing so. Avoid damage to the mechanical seal due to jamming.
7. Insert the pre-assembled lantern unit carefully into the pump housing and screw together. As you do so, hold onto the rotating parts of the coupling to avoid damage to the mechanical seal.
8. Slightly loosen the coupling screws. Slightly open the pre-assembled coupling.
9. Install the motor using suitable hoisting gear and tighten the connection between lantern and motor.
10. Slide the forked spacer (Fig. 13, Item 10) between the lantern and coupling. The forked spacer must sit there without any play.
11. Slightly tighten the coupling screws (Fig. I/II/III, Item 1.41) first until the coupling half shells are in contact with the shims.
12. Afterwards, screw the coupling together evenly. In doing so, the specified distance between the lantern and the coupling of 5 mm is automatically adjusted via the forked spacer.
13. Remove the forked spacer.
14. Install the coupling guard.
15. Connect the motor and mains connection cables.

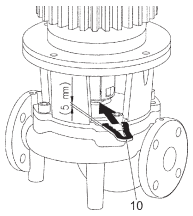


*Fig. 17:* Positioning the forked spacer

### 10.2.3 Changing the motor

Increased bearing noises and unusual vibrations indicate bearing wear. The bearings or motor must then be replaced. The drive may only be replaced by the Wilo customer service!

**Dismantling:**



**WARNING**

**Risk of scalding!**

At high fluid temperatures and system pressures, allow the pump to cool down first and then depressurise the system.



## WARNING

**Personal injury!**

Incorrect dismantling of the motor can result in personal injury.

- Before dismantling the motor, ensure that the centre of gravity is not above the holding point.
- Secure the motor against tipping over during transport.
- Always use suitable lifting accessories and secure parts against falling.
- Never stand below a suspended load.

1. Disconnect the system from the power supply and secure it against being switched on again without authorisation.
2. Make sure it is not live.
3. Earth the work area and short-circuit.
4. Close the shut-off devices upstream and downstream of the pump.
5. Depressurise the pump by opening the air vent valve (Fig. I/II/III, Item 1.31).



## NOTICE

For all following work, observe the screw tightening torque specified for the respective thread type (table on screw tightening torques)!

6. Disconnect the motor connection cables.
7. Remove the coupling guard (Fig. I/II/III, Item 1.32) using a suitable tool (e.g. screwdriver).
8. Dismantle the coupling (Fig. I/II/III, Item 1.5).
9. Loosen the motor fastening screws (Fig. I/II/III, Item 5) on the motor flange and lift the drive off the pump with suitable hoisting gear.
10. Install the new motor using suitable hoisting gear and screw the connection between lantern and motor tight.
11. Check the coupling and shaft sliding surfaces and, if necessary, clean and slightly oil them.
12. Pre-install coupling shells on the shafts with shims inserted in between them.
13. Slide the forked spacer (Fig. 13, Item 10) between the lantern and coupling. The forked spacer must sit there without any play.
14. First, slightly tighten the coupling screws until the coupling half-shells are in contact with the shims.
15. Afterwards, screw the coupling together evenly. In doing so, the specified distance between the lantern and the coupling of 5 mm is automatically adjusted via the forked spacer.
16. Remove the forked spacer.
17. Install the coupling guard.
18. Connect the motor cable or mains connection cable.

**Always tighten screws diagonally.**

| Screw connection | | | | Tightening torque |
|---|---|---|---|---|
| Post | Shaft size | Size/tensile strength class | | Nm ± 10 % |
| Impeller – Shaft[1)] | D28 | M14 | A2-70 | 70 |
| Impeller – Shaft[1)] | D38 | M18 | | 145 |
| Impeller – Shaft[1)] | D48 | M24 | | 350 |

| Screw connection<br>Post | Shaft size | Size/tensile strength class | | Tightening torque<br>Nm ± 10 % |
|---|---|---|---|---|
| Pump housing – Lantern | | M16 | 8.8 | 100 |
| Lantern – Motor | | M8 | | 25 |
| Lantern – Motor | | M10 | | 35 |
| Lantern – Motor | | M12 | | 60 |
| Lantern – Motor | | M16 | | 100 |
| Lantern – Motor | | M20 | | 170 |
| Coupling[2)] | | M8 | 10.9 | 30 |
| Coupling[2)] | | M10 | | 60 |
| Coupling[2)] | | M12 | | 100 |
| Coupling[2)] | | M14 | | 170 |
| Coupling[2)] | | M16 | | 230 |
| Baseplate – Pump housing | | M6 | 8.8 | 10 |
| Baseplate – Pump support foot | | M8 | | 25 |
| Baseplate – Motor | | M10 | | 35 |
| Supporting block – Pump housing | | M12 | | 60 |
| | | M16 | | 100 |
| Supporting block – Pump support foot | | M20 | | 170 |
| | | M24 | | 350 |
| Supporting block – Motor | | | | |

**Installation information:**

1) Lubricate the thread with Molykote® P37 or comparable.

2) Tighten the screws uniformly, keep the gap even on both sides.

*Table 10:* Screw tightening torques

## 11 Faults, causes and remedies



**WARNING**

**Have faults remedied by qualified personnel only! Observe all safety instructions!**

**If the malfunction cannot be rectified, consult a specialist technician or the nearest Wilo customer service or representative location.**

| Faults | Causes | Remedies |
|---|---|---|
| Pump does not start or stops working. | Pump blocked. | Electrically isolate the motor. Remove the cause of the blocking. Motor blocking: Overhaul/ replace motor/motor impeller unit. |
| | Cable terminal loose. | Check all cable connections. |
| | Fuse protection defect. | Check fuses; replace faulty fuses. |
| | Motor damaged. | Have the motor checked by the Wilo customer service or a specialised service centre and repaired if necessary. |
| | Motor protection switch has triggered. | Set the pump to the rated volume flow on the discharge side (see rating plate). |
| | Motor protection switch set incorrectly | Set the motor protection switch to the correct rated current (see rating plate). |
| | Motor protection switch affected by excessive ambient temperature | Move the motor protection switch or protect it using heat insulation. |
| | PTC thermistor tripping unit has triggered. | Check the motor and fan cover for contamination and clean them if necessary.<br>Check the ambient temperature and, if necessary, set the ambient temperature to ≤ 40 °C by forced ventilation. |
| Pump runs at reduced performance. | Incorrect direction of rotation. | Check the direction of rotation and change it if necessary. |
| | Stop valve on the pressure side throttled. | Slowly open the stop valve. |
| | Speed too slow | Incorrect terminal bridging (Y instead of Δ). |
| | Air in the suction line | Eliminate leakage at flanges. Vent pump. In case of visible leakage, replace the mechanical seal. |
| Pump makes noises. | Cavitation due to insufficient suction pressure. | Increase the suction pressure. Observe the minimum inlet pressure at the suction port. Check slide valve and filter on the suction side and clean if need be. |
| | Motor has bearing damage. | Have the pump checked by Wilo customer service or a specialised service centre and repaired if necessary. |
| | Impeller grinding. | Check faces and centrings and between lanterns and motor and lantern and pump housing, clean if necessary.<br>Check the coupling and shaft sliding surfaces. If necessary, clean and slightly oil them. |

*Table 11:* Faults, causes and remedies

## 12 Spare parts

Obtain genuine spare parts only from a qualified specialist or Wilo customer service. To avoid queries and order errors, please provide all pump and drive rating plate data with every order.

### CAUTION

**Risk of material damage!**

Trouble-free pump operation can only be guaranteed when original spare parts are used.

Use only original Wilo spare parts!

Information to be provided when ordering spare parts: Spare part numbers, spare part designations, all data from pump and drive rating plate. This helps prevent return queries and incorrect orders.

### NOTICE

For all installation work, the forked spacer is required for setting the correct impeller position in the pump housing!

For the allocation of assemblies, see Fig. I/II/III.

| No. | Part | Details | No. | Part | Details |
|---|---|---|---|---|---|
| 1 | Exchange kit (complete) | | 1.5 | Coupling (complete) | |
| 1.1 | Impeller (kit) with: | | 2 | Motor | |
| 1.11 | | Nut | 3 | Pump housing (kit) with: | |
| 1.12 | | Conical spring washer | 1.14 | | O-ring |
| 1.13 | | Impeller | 3.1 | | Pump housing (Atmos GIGA-I/-D/-B) |
| 1.14 | | O-ring | 3.2 | | Valve insert (see Fig. IV a) Switchover valve (see Fig. IV b, IV c) |
| 1.15 | | Shim | 4 | Fastening screws for lantern/pump housing | |
| 1.16 | | Shim | 5 | Fastening screws for motor/lantern | |
| 1.2 | Mechanical seal (kit) with: | | 6 | Nut for motor/lantern fixation | |
| 1.11 | | Nut | 7 | Washer for motor/lantern fixation | |
| 1.12 | | Conical spring washer | | | |
| 1.14 | | O-ring | | | |
| 1.15 | | Shim | 10 | Forked spacer (Fig. 13) | |
| 1.21 | | Mechanical seal | | | |
| 1.3 | Lantern (kit) with: | | | | |
| 1.11 | | Nut | | | |
| 1.12 | | Conical spring washer | | | |
| 1.14 | | O-ring | | | |
| 1.15 | | Shim | | | |
| 1.31 | | Air vent valve | | | |
| 1.32 | | Coupling guard | | | |

| No. | Part | Details | No. | Part | Details |
|---|---|---|---|---|---|
| 1.33 | | Lantern | | | |
| 1.4 | Coupling/shaft (kit) with: | | | | |
| 1.11 | | Nut | | | |
| 1.12 | | Conical spring washer | | | |
| 1.14 | | O-ring | | | |
| 1.41 | | Complete coupling/ shaft | | | |
| 1.42 | | Circlip | | | |
| 1.43 | | Key | | | |
| 1.44 | | Coupling screws | | | |

*Table 12:* Spare parts table

## 13 Disposal

### 13.1 Oils and lubricants

Operating fluids must be collected in suitable containers and disposed of in accordance with the locally applicable guidelines. Wipe up drips immediately!

### 13.2 Information on the collection of used electrical and electronic products

Proper disposal and appropriate recycling of this product prevents damage to the environment and danger to your personal health.



**NOTICE**

**Disposal in domestic waste is prohibited!**

In the European Union this symbol may be included on the product, the packaging or the accompanying documentation. It means that the electrical and electronic products in question must not be disposed of along with domestic waste.

Please note the following points to ensure proper handling, recycling and disposal of the used products in question:

- Hand over these products at designated, certified collection points only.
- Observe the locally applicable regulations!

Please consult your local municipality, the nearest waste disposal site, or the dealer who sold the product to you for information on proper disposal. See www.wilo-recycling.com for more information about recycling.

**Subject to change without prior notice!**



wilo

Pioneering for You



**Local contact at**
**www.wilo.com/contact**

WILO SE
Wilopark 1
44263 Dortmund
Germany
T +49 (0)231 4102-0
T +49 (0)231 4102-7363
wilo@wilo.com
www.wilo.com