Pioneering for You

Wilo-Yonos MAXO/-D/-Z







en Installation and operating instructions

2226410 • Ed.03/2025-04

Yonos MAXO
https://qr.wilo.com/155

Yonos MAXO-D
https://qr.wilo.com/156

Yonos MAXO-Z
https://qr.wilo.com/186

Fig. I:

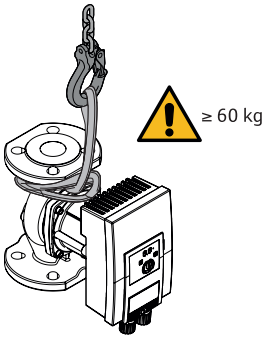

Fig. II:

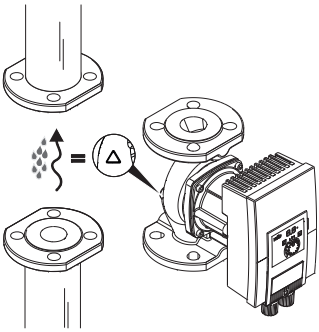

Fig. III

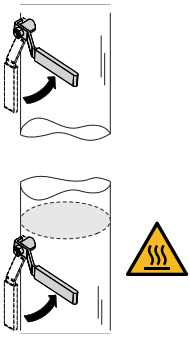

Fig. IV

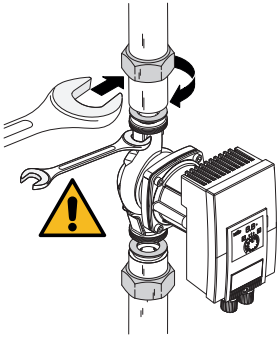

Fig. V

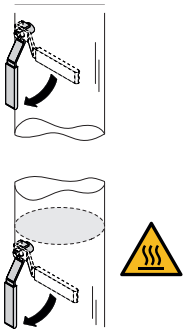

Fig. VI

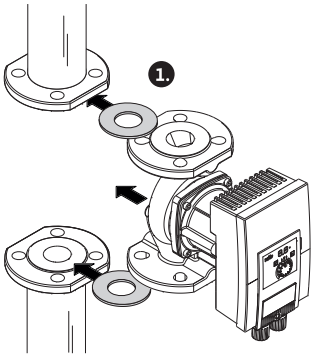

Fig. VII

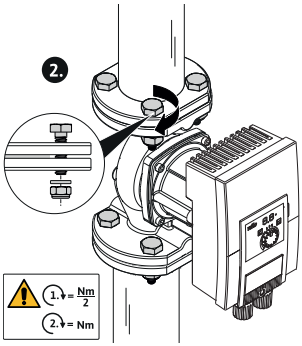

Fig. VIII

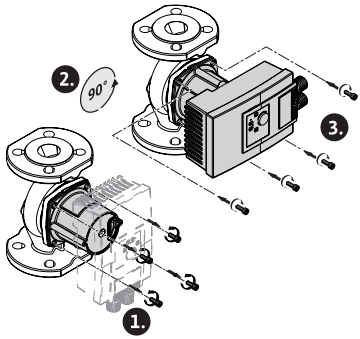

Fig. IX

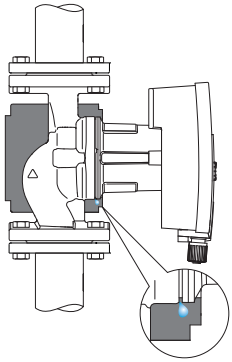

Fig. X

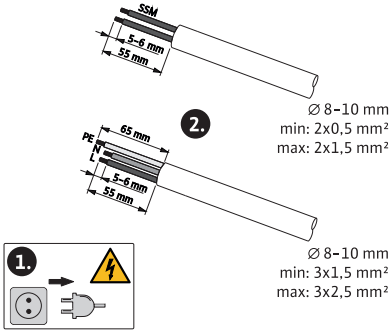

∅ 8–10 mm
min: 2x0,5 mm²
max: 2x1,5 mm²

∅ 8–10 mm
min: 3x1,5 mm²
max: 3x2,5 mm²

Fig. XI

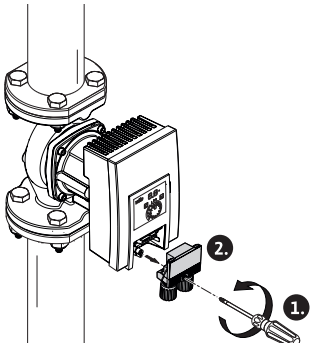

Fig. XII

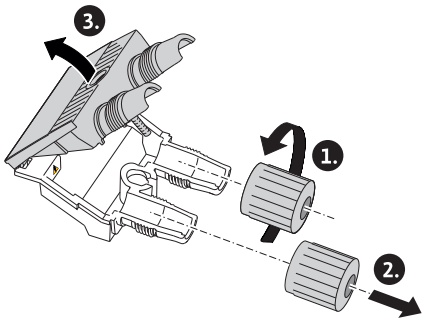

Fig. XIII

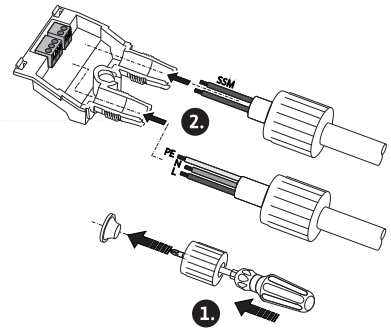

Fig. XIV

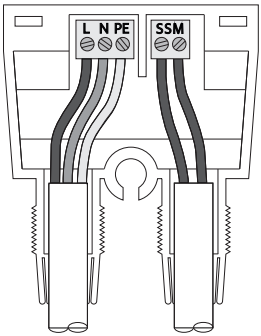

Fig. XV

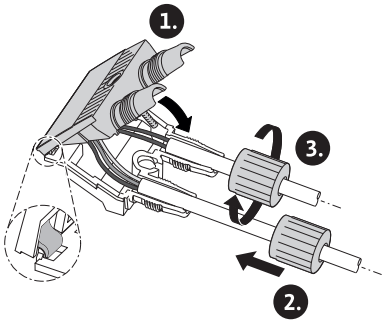

Fig. XVI

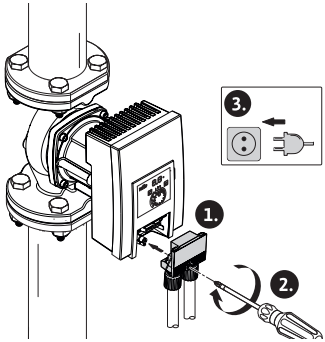



Table of contents

1 General 8
1.1 About these instructions 8
1.2 Copyright 8
1.3 Subject to change 8
1.4 Exclusion from warranty and liability 8

2 Safety 8
2.1 Identification of safety instructions 9
2.2 Personnel qualifications 9
2.3 Electrical work 9
2.4 Operator responsibilities 10

3 Transportation and storage 10
3.1 Transport inspection 11
3.2 Transport and storage conditions 11

4 Intended use and misuse 11
4.1 Intended use 11
4.2 Misuse 12
4.3 Safety instructions 13

5 Description of the pump 13
5.1 Permissible installation 14
5.2 Type key 14
5.3 Technical data 15
5.4 Min. inlet pressure 16
5.5 Scope of delivery 16
5.6 Accessories 17
5.7 Functional extension 17

6 Installation 17
6.1 Personnel qualifications 17
6.2 Operator responsibilities 17
6.3 Safety 17
6.4 Preparing the installation 18
6.5 Installation 19

7 Electrical connection 22
7.1 Requirements 23
7.2 Connection options 24
7.3 Twin-head pumps 24
7.4 Collective fault signal (SSM) 24
7.5 Connect 25

8 Put into operation 25
8.1 Venting 25
8.2 Flush 26
8.3 Select operating mode 26
8.4 Adjust operating mode and pump output 28

9 Maintenance 28
9.1 Shutdown 28
9.2 Dismantling/installation 29

10 Troubleshooting 31
10.1 Personnel requisition 31
10.2 Safety during troubleshooting 31
10.3 Error table 31
10.4 Fault signals 31
10.5 Warning signals 32

11 Spare parts 33

12 Disposal 33
12.1 Information on the collection of used electrical and electronic products 33

1 General

1.1 About these instructions

These instructions form part of the product. Compliance with the instructions is essential for correct handling and use:

- Read the instructions carefully before all activities.
- Keep the instructions in an accessible place at all times.
- Observe all product specifications.
- Observe the markings on the product.

The language of the original operating instructions is German. All other languages of these instructions are translations of the original operating instructions.

1.2 Copyright

WILO SE © 2025

The reproduction, distribution and utilisation of this document in addition to communication of its contents to others without express consent is prohibited. Offenders will be held liable for payment of damages. All rights reserved.

1.3 Subject to change

Wilo shall reserve the right to change the listed data without notice and shall not be liable for technical inaccuracies and/or omissions. The illustrations used may differ from the original and are intended as an exemplary representation of the product.

1.4 Exclusion from warranty and liability

Wilo shall specifically not assume any warranty or liability in the following cases:

- Inadequate configuration due to inadequate or incorrect instructions by the operator or the client
- Non-compliance with these instructions
- Improper use
- Incorrect storage or transport
- Incorrect installation or dismantling
- Insufficient maintenance
- Unauthorised repairs
- Chemical, electrical or electrochemical influences
- Wear

2 Safety

This chapter contains basic instructions for the individual life cycles of the product. Failure to observe this information carries the following risks:

- Danger to persons from electrical, mechanical and bacteriological effects as well as electromagnetic fields
- Environmental damage from discharge of hazardous substances
- Damage to property
- Failure of important product functions
- Failure of required maintenance and repair procedures

Failure to observe the instructions will result in the loss of any claims for damages.

The directions and safety instructions in the other sections must also be observed!

2.1 Identification of safety instructions

These installation and operating instructions set out safety instructions for preventing personal injury and damage to property, which are displayed in different ways:

- Safety instructions relating to personal injury start with a signal word and are **preceded by a corresponding symbol**.
- Safety instructions relating to property damage start with a signal word and are displayed **without** a symbol.

Signal words

- **DANGER!**
  Failure to follow the instructions will result in serious injury or death!
- **Warning!**
  Failure to follow instructions can lead to (serious) injury!
- **Caution!**
  Failure to follow instructions can lead to property damage and possible total loss.
- **Notice!**
  Useful information on handling the product

Symbols

These instructions use the following symbols:


General danger symbol


Danger of electric voltage


Warning of hot surfaces


Warning of magnetic fields


Notices

2.2 Personnel qualifications

Personnel must:

- Be instructed about locally applicable regulations governing accident prevention.
- Have read and understood the installation and operating instructions.

Personnel must have the following qualifications:

- Electrical work: a qualified electrician must carry out the electrical work.
- Installation/dismantling: The technician must be trained in the use of the necessary tools and fixation materials.
- The product must be operated by persons who have been instructed on how the complete system functions.

Definition of "qualified electrician"

A qualified electrician is a person with appropriate technical education, knowledge and experience who can identify **and** prevent electrical hazards.

2.3 Electrical work

- Electrical work must be performed by a qualified electrician.

- Nationally applicable guidelines, standards and regulations as well as specifications issued by the local energy supply companies for connection to the local power supply system must be observed.
- Before commencing work, disconnect the product from the mains and secure it against being switched on again.
- The product must be earthed.
- Have defective cables replaced immediately by a qualified electrician.
- Never open the control module and never remove operating elements.

2.4 Operator responsibilities

Operators must:

- Provide the installation and operating instructions in a language which the personnel can understand.
- Have all work carried out by qualified personnel only.
- Make sure that personnel are suitably trained for the specified work.
- Train personnel with regard to the operating principles of the system.
- Provide the necessary protective equipment and make sure that personnel wear it.
- Eliminate any risk from electrical current.
- Equip hazardous components (extremely cold, extremely hot, rotating, etc.) with a guard to be provided by the customer.
- Have defective gaskets and connection cables replaced.
- Keep highly flammable materials at a safe distance from the product.

Follow all information that appears on the product and ensure that it remains permanently legible:

- Warning and hazard notices
- Rating plate
- Direction of rotation arrow/symbol for direction of flow
- Labelling of connections

This device can be used by children from 8 years of age as well as people with reduced physical, sensory or mental capacities or lack of experience and knowledge if they are supervised or instructed on the safe use of the device and they understand the dangers that can occur. Children are not allowed to play with the device. Cleaning and user maintenance must not be carried out by children without supervision.

3 Transportation and storage

The pump and its packaging must be protected against moisture, frost and mechanical damage during transport and temporary storage.



WARNING

Risk of injury from sodden packaging!

Packaging that has been sodden loses its strength and can cause injury to persons if the product falls out.



WARNING

Risk of injury from ripped plastic strips!

Ripped plastic strips on the packaging render transport protection void. Products falling out may cause personal injury.

3.1 Transport inspection

Check delivery immediately for damage and completeness. Where necessary make a complaint immediately.

3.2 Transport and storage conditions

- Only carry on motor or pump housing.
- Store in original packaging.

- Storage of pump with horizontal shaft on a horizontal surface. Observe the packaging icon  (top).
- If necessary, use hoisting gear with sufficient bearing capacity (Fig. I).
- Protect against moisture and mechanical load.
- Permissible temperature range: –20 °C … +70 °C
- Relative humidity: maximum 95 %
- Dry pump thoroughly following use (e.g. function test) and store for a maximum of 6 months.

Domestic hot water circulators:

- Dirt and contamination should be avoided once the product is removed from its packaging.

4 Intended use and misuse

4.1 Intended use

Intended use also includes observing these instructions and the specifications and markings on the pump.

Any use beyond the intended use is considered misuse and will void any warranty claims.

The pumps do not fulfil the requirements of the ATEX directive and are not suitable for pumping explosive or easily flammable fluids!

Yonos MAXO /–D (heating application)

Use

Circulation of liquid in the following application areas:

- Hot–water heating systems
- Cooling and chilled water circulation systems
- Closed industrial circulation systems
- Solar installations

Permitted fluids

- Heating water in accordance with VDI 2035 Part 1 and Part 2
- Demineralised water in accordance with VDI 2035–2, “Water quality” chapter
- Water–glycol mixtures, max. mixing ratio of 1:1.
  If glycol is added, the pumping data of the pump must be corrected according to the higher viscosity, depending on the mixing ratio percentage.



NOTICE

Use other fluids only after approval by WILO SE!

Permitted temperatures

- –20 °C … +110 °C



WARNING

Health hazard due to materials not approved for drinking water!

Because of the materials used in their construction, pumps of the Wilo-Yonos MAXO series are unsuitable for use in applications involving drinking water or foodstuffs.

Yonos MAXO-Z (drinking water application)

Use

Circulators from the Yonos MAXO-Z series may only be used for pumping liquids in domestic hot water circulation systems.

Permitted fluids

- Drinking water acc. to EC Drinking Water Directive.
- Clean, non-aggressive, low-viscosity fluids in accordance with national drinking water provisions.

CAUTION

Property damage due to chemical disinfectants!

Chemical disinfectants can result in damage to material.

- Comply with the specifications of DVGW-W 551-3! **Or:**
- Remove the pump for the duration of the chemical disinfection process!

Permitted temperatures

- 0 °C ... +80 °C

4.2 Misuse

The operational reliability of the supplied product is only guaranteed for intended use. Any use beyond the intended use is considered misuse and will result in the loss of all liability claims.
The values must never fall below or exceed the limit values specified in the catalogue/data sheet.
Misuse of the pump can lead to dangerous situations and damage:

- Never use non-specified fluids.
- Highly flammable materials/fluids should always be kept at a safe distance from the product.
- Never allow unauthorised persons to carry out work.
- Never operate the pump beyond the specified limits of use.
- Never carry out unauthorised conversions.
- Never operate with phase angle control.
- Use authorised Wilo accessories and genuine spare parts only.

4.3 Safety instructions

Electrical current



DANGER

Electric shock!

The pump is operated electrically. An electric shock poses a risk of fatal injury!

- Have only qualified electricians carry out work on electrical components.
- Before any work, deactivate the power supply (also for SSM if necessary) and safeguard against accidental switch-on. Due to the presence of dangerous contact voltage, work on the control module must not be started until 5 minutes have elapsed.
- Never open the control module and never remove operating elements.
- Only operate the pump with intact components and connecting cables.

Magnetic field



DANGER

Risk of fatal injury from magnetic field!

When dismantled, the permanent magnet rotor inside the pump can pose a risk of fatal injury for people with medical implants (e.g. pacemakers).

- Never remove the rotor.

Hot components



WARNING

Risk of burns from hot surfaces!

Pump housing and glandless motor can get hot and cause burns when touched.

- Only touch the control module during operation.
- Allow the pump to cool down before commencing any work.

5 Description of the pump

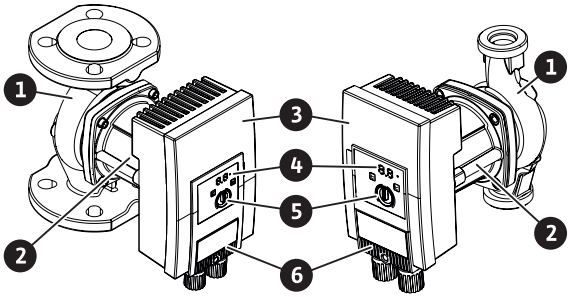

Fig. 1: Pump overview

Item	Name
1	Pump housing
2	Motor
3	Control module
4	LED display and fault signal LED
5	Operating button
6	Plug

Table 1: Description of the pump

The high-efficiency pumps Wilo-Yonos MAXO, Wilo-Yonos MAXO-D and Wilo-Yonos MAXO-Z in the version with flange or threaded pipe union are glandless pumps with a permanent magnet rotor and integrated differential pressure control.

There is a control module (Fig. 1, item 3) on the motor housing, which controls the pump and provides an SSM interface. Depending on the chosen application or control function, speed or differential pressure will be controlled. For all differential pressure control functions, the pump continuously adapts to the system's changing power requirements.

Power limit

The pump is fitted with a power-limiting function, which prevents overload. This may have an operational influence on the delivery rate.

5.1 Permissible installation

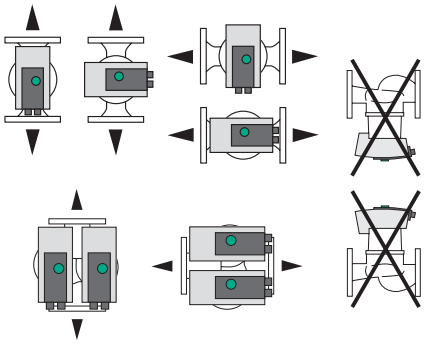

Fig. 2: Permissible installation positions

5.2 Type key

Example: Yonos MAXO-D 32/0.5-11	
Yonos MAXO	Pump designation
	Single pump (without code letter)
-D	Twin-head pump
-Z	Single pump for domestic hot water circulation systems
32	Flange connection DN 32

Example: Yonos MAXO-D 32/0.5-11	
0.5–11	0.5: Minimum delivery head in m 11: Maximum delivery head in m at Q = 0 m³/h

5.3 Technical data

Technical data Yonos MAXO /-D

Specification	Value
Permissible fluid temperature	–20 °C ... +110 °C
Permissible ambient temperature	–20 °C ... +40 °C
Maximum relative humidity	≤ 95 %
Mains voltage	1~ 230 V +/–10 % 50/60 Hz
Residual current ΔI	≤ 3.5 mA
Electromagnetic compatibility	Interference emission in acc. with: EN 61800-3:2004+A1:2012/residential environment (C1) Interference immunity in acc. with: EN 61800-3:2004+A1:2012/industrial environment (C2)
Emissions sound-pressure level	< 52 dB(A)
Energy efficiency index (EEI)	See rating plate
Temperature class	TF110 (see IEC 60335-2-51)
Pollution degree	2 (IEC 60664-1)
Max. permissible operating pressure	PN 6/10

For further instructions see rating plate and catalogue.

Technical data Yonos MAXO-Z

Specification	Value
Permissible fluid temperature	0 °C ... +80 °C (for short periods (2 h): +110 °C)
Permissible ambient temperature	0 °C ... +40 °C
Maximum relative humidity	≤ 95 %
Mains voltage	1~ 230 V +/–10 % 50/60 Hz
Residual current ΔI	≤ 3.5 mA

Specification	Value
Electromagnetic compatibility	Interference emission in acc. with: EN 61800-3:2004+A1:2012/residential environment (C1) Interference immunity in acc. with: EN 61800-3:2004+A1:2012/industrial environment (C2)
Emissions sound-pressure level	< 52 dB(A)
Energy efficiency index (EEI)	See rating plate
Temperature class	TF80 (see IEC 60335-2-51)
Pollution degree	2 (IEC 60664-1)
Max. permissible operating pressure	PN 6/10

For further instructions see rating plate and catalogue.

5.4 Min. inlet pressure

Nominal diameter	Fluid temperature		
	-20 °C to +50 °C 0 °C to +50 °C[1)]	up to +95 °C	up to +110 °C
G 1½	0.3 bar	1.0 bar	1.6 bar
G 2	0.3 bar	1.0 bar	1.6 bar
DN 32	0.3 bar	1.0 bar	1.6 bar
DN 40	0.5 bar	1.2 bar	1.8 bar
DN 50	0.5 bar	1.2 bar	1.8 bar
DN 65	0.7 bar	1.5 bar	2.3 bar
DN 80	0.7 bar	1.5 bar	2.3 bar
DN 100	0.7 bar	1.5 bar	2.3 bar

Table 2: Min. inlet pressure

[1)] Yonos MAXO-Z

NOTICE

Effective up to 300 m above sea level. For higher altitudes +0.01 bar/100 m.

For higher fluid temperatures, fluids of lower density, higher flow resistances or lower air pressure, adjust the values accordingly.

The maximum installation height is 2000 metres above MSL.

5.5 Scope of delivery

- Pump

- 8x washer M12 (only flange-end pump)
- 8x washer M16 (only flange-end pump)
- 2x flat gasket (only threaded pipe union pump)
- Installation and operating instructions

5.6 Accessories

- Wilo-Connect module Yonos MAXO
- Wilo-Control to display the differential pressure
- Thermal insulation shell (for single pumps only)

See catalogue for detailed list.

5.7 Functional extension

The Wilo-Connect module Yonos MAXO as retrofittable plug-in module (accessories) extends the pump functions to include:

- SBM collective run signal as potential-free NO contact
- Control input “Overriding Off” (“Ext. Off”) for potential-free NC contact
- Main/standby operation with running time-dependent switchover for twin-head pump operation

For technical details see Wilo-Connect module Yonos MAXO installation and operating instructions.

6 Installation

6.1 Personnel qualifications

- Installation/dismantling: The technician must be trained in the use of the necessary tools and fixation materials.

6.2 Operator responsibilities

- Observe national and regional regulations!
- Observe locally applicable accident prevention and safety regulations of professional and trade associations.
- Provide protective equipment and ensure that the protective equipment is worn by personnel.
- Observe all regulations for working with heavy loads.

6.3 Safety



WARNING

Risk of burns from hot surfaces!

Pump housing and glandless motor can get hot and cause burns when touched.

- Only touch the control module during operation.
- Allow the pump to cool down before commencing any work.



WARNING

Risk of scalding from hot fluids!

Hot fluids can cause scalding.
Before the installation or removal of the pump or the dismantling of the housing screws, observe the following:

- Allow the heating system to cool down completely.
- Close shut-off devices or drain the heating system.



DANGER

Risk of fatal injury from falling parts!

The pump itself and pump parts can have a very high net weight. Falling parts pose a risk of cuts, crush injuries, bruises or impacts which can be fatal.

- Always wear suitable protective equipment (e.g. helmet, gloves).
- Always use suitable lifting equipment and secure parts against falling.
- Never stand below a suspended load.
- During storage and transport, as well as before all installation and assembly work, ensure that the pump is in a safe and secure position.

6.4 Preparing the installation

1. Attach pipes to the floor, ceiling or wall using appropriate fittings so that the pump does not bear the weight of the piping.
2. Branch off the safety feed ahead of the pump when installing in feed of open systems (EN 12828).
3. Install the pump at an easily accessible point so that it can be easily checked or replaced at a later time.
4. Complete all welding and soldering processes.
5. Flush system.
6. Provide shut-off valves upstream and downstream of the pump.
7. Comply with the inlet and outlet sections in front of and behind the pump.
8. Make sure that the pump can be installed free of mechanical stresses.
9. Allow a 10 cm distance around the control module so that it does not overheat.
10. Observe permissible installation positions.

Installation within a building

The pump should be installed in a dry, well ventilated and dust-free room – in accordance with the protection class (see rating plate of the pump).

CAUTION

Exceeding/dropping below the permissible ambient temperature!

The control module switches off in the event of excessive temperatures!

- Provide adequate ventilation/heating!
- Never cover the control module and pump with objects!
- Observe permissible ambient temperatures (see “Technical data” table).

Installation outside a building (outdoor installation)
- Observe permissible environmental conditions and protection class.
- Install the pump in a housing as weather protection. Observe permissible ambient temperatures (see “Technical data” table).
- Protect the pump against the effects of weather, for example, direct sunlight, rain and snow.
- Protect the pump so that the condensate drain openings remain free of dirt.
- Take suitable measures to prevent the formation of condensation water.

6.5 Installation
- Perform assembly so that the pump shaft is horizontal and voltage-free!
- Make sure that the pump is installed in a permissible installation position and with the correct flow direction: Follow the direction of flow symbol on the pump housing! (Fig. II)
- Installation of pump only in permissible installation position! (See chapter “Permissible installation positions”)

6.5.1 Install threaded pipe union pump



WARNING

Risk of burns from hot surfaces!

The piping can get hot and cause burns when touched.
- Allow the heating system to cool down before commencing any work.
- Wear protective gloves.

Installation steps
1. Install suitable threaded pipe unions.
2. Close the shut-off valves in front of and behind the pump (Fig. III).
3. Insert the pump into the pipe together with the supplied flat gaskets.
4. Screw together the pump with the union nuts. In doing so, hold it exclusively against the flat faces on the pump housing (Fig. IV).
5. Open the shut-off valves in front of and behind the pump (Fig. V).
6. Check impermeability.

6.5.2 Flange-end pump installation



WARNING

Risk of burns from hot surfaces!

The piping can get hot and cause burns when touched.
- Allow the heating system to cool down before commencing any work.
- Wear protective gloves.

WARNING

Risk of injury and scalding due to improper installation!

The flange connection can be damaged and develop leaks if the pump is not installed correctly. Risk of scalding due to escaping hot fluid!

- Never interconnect two combination flanges!
- Pumps with combination flanges are not permitted for operating pressures PN 16!
- The use of securing elements (e.g. spring lock washers) can result in leakages at the flange connection. They are therefore not permissible. Use the washers supplied (scope of delivery) between screw heads/nut heads and the combination flange!
- The permissible tightening torques listed in the table below must not be exceeded, even if screws of higher strength (≥ 4.6) are used, since splintering may otherwise occur at the edges of the long holes. This may cause the screws to lose their prestress and leakage can occur in the flange connection. Risk of scalding!
- Use screws of sufficient length. The screw thread must project by at least one pitch of screw thread from the screw nut.
- Perform leakage test at maximum permissible operating pressure!

Screws and tightening torques

Flange-end pump PN 6

	DN 32	DN 40	DN 50
Screw diameter	M 12	M 12	M 12
Strength class	≥ 4.6	≥ 4.6	≥ 4.6
Tightening torque	40 Nm	40 Nm	40 Nm
Screw length	≥ 55 mm	≥ 55 mm	≥ 60 mm

	DN 65	DN 80	DN 100
Screw diameter	M 12	M16	M16
Strength class	≥ 4.6	≥ 4.6	≥ 4.6
Tightening torque	40 Nm	95 Nm	95 Nm
Screw length	≥ 60 mm	≥ 70 mm	≥ 70 mm

Flange-end pump PN 10

	DN 32	DN 40	DN 50
Screw diameter	M 16	M 16	M 16
Strength class	≥ 4.6	≥ 4.6	≥ 4.6
Tightening torque	95 Nm	95 Nm	95 Nm
Screw length	≥ 60 mm	≥ 60 mm	≥ 65 mm

	DN 65	DN 80	DN 100
Screw diameter	M 16	M 16	M 16
Strength class	≥ 4.6	≥ 4.6	≥ 4.6
Tightening torque	95 Nm	95 Nm	95 Nm
Screw length	≥ 65 mm	≥ 70 mm	≥ 70 mm

Installation steps

1. Close the shut-off valves in front of and behind the pump (Fig. III).
2. Insert the pump into the pipe together with two suitable flat gaskets in such a way that the flanges can be screwed to the pump inlet and outlet (Fig. VI).
   Observe direction of flow! The arrow-shaped flow indicator on the pump housing must point in the direction of flow.
3. Screw the flanges together in a crosswise manner, in two steps using suitable screws and the supplied washers (Fig. VII). Observe specified tightening torques!
4. Open the shut-off valves in front of and behind the pump (Fig. V).
5. Check impermeability.

6.5.3 Aligning the motor head

The motor head must be aligned according to installation position (Fig. VIII).

1. Check permissible installation positions (see chapter “Permissible installation positions”).
2. Dismantle motor head and carefully turn.
   ⇒ Do not remove the motor head from the pump housing.
3. Subsequently, tighten motor fastening screws diagonally. Observe the tightening torques!

CAUTION

Leakage!

Damage to the gasket causes leakage.

- Do not remove the gasket.
- Replace the damaged gasket.

Screw	Tightening torque in Nm
M6x18	10
M6x22	10
M10x30	18–20

Table 3: Tightening torques for motor fastening screws

6.5.4 Insulation

Insulation of the pump in heating systems and domestic hot water circulation applications



WARNING

Risk of burns from hot surfaces!

The entire pump can become very hot. When retrofitting the insulation during ongoing operation, there is a risk of burns!

- Allow the pump to cool down before commencing any work.

Only use thermal insulation shells (optional accessories) in heating and domestic hot water circulation applications with a fluid temperature > 20 °C.

Insulation of the pump in cooling/air-conditioning systems

For cooling and air-conditioning applications, use standard diffusion-proof insulation materials.

CAUTION

Electrical defect!

Condensate that accumulates in the motor can cause an electrical defect.

- Insulate the pump housing only up to the separating gap to the motor!
- Keep the condensate drain grooves unobstructed to ensure that condensate that develops in the motor can drain off unobstructed! (Fig. IX)

7 Electrical connection

Electrical connection may only be carried out by a qualified electrician and in accordance with the applicable regulations!

Safety-relevant information from other chapters must be strictly observed!

DANGER

Risk of fatal electrical shock!

Immediate risk of fatal injury if live components are touched!
In particular, persons with medical aids, such as cardiac pacemakers, insulin pumps, hearing aids, implants or similar are at risk.
Death, severe injury and damage to property may be the result.
A professional medical assessment is always necessary for such persons!
Applying an incorrect voltage to SELV lines will result in incorrect voltage in all pumps and on-site building automation devices that are connected to SELV lines.

- Before commencing work, switch off the power supply and secure it from being switched on again.
  - Due to the presence of dangerous contact voltage, work on the control module must not be started until 5 minutes have elapsed!
- Check whether all connections (including potential-free contacts) are voltage-free.
- Only connect or operate the pump with the control module installed.
- Never open the control module and never remove configuration and operating elements.
- Never put the pump into operation if the control module/Wilo plug is damaged.
- Never apply incorrect voltage.

7.1 Requirements

NOTICE

Nationally applicable guidelines, standards and regulations as well as the requirements of local energy supply companies must be observed!

CAUTION

Incorrect connection

Incorrect connection of the pump results in damage to the electronics.

- Observe the current type and voltage on the rating plate.
- Connect to 230 V low-voltage networks. When connecting to IT networks (Isolé Terre electrical system), always make sure that the voltage between the live wires (L1-L2, L2-L3, L3-L1 ➔ Fig. 3) does not exceed 230 V.
  In case of error (earth fault), the voltage between the live wire and PE must not exceed 230 V.
- During external connection of the pump, deactivate a pulse of the voltage (for example phase angle control).
- Switching the pump via triacs/solid-state relays must be examined on a case-by-case basis.
- During deactivation with on-site power relay: Rated current ≥ 10 A, rated voltage 250 V AC
- Observe the switching frequency:
  – Switch-on/off procedures via mains voltage ≤ 100/24 h
  – ≤ 20/h for a switching frequency of 1 min. between switching on/off via mains voltage
- During electrical installation of the pump, comply with the national regulations regarding the requirements for residual-current devices (RCDs) and their selection.

- **Pumps with a rated power of P1 ≤ 200 W** (see rating plate or data sheet):
  In the event of an insulation fault, the residual current may appear as pulsating DC.
- **Pumps with a rated power of P1 > 200 W** (see rating plate or data sheet):
  In the event of an insulation fault, the residual current may appear as DC or pulsating DC.

- Observe leakage current $I_{eff} \leq 3.5$ mA for each pump.
- The electrical connection must be made via a fixed connecting cable equipped with a connector device or an all-pole switch with a contact opening width of at least 3 mm (VDE 0700/Part 1).
- To protect against leakage and for strain relief to the threaded cable gland, use a connection pipe with sufficient outer diameter (see chapter “Connecting”).
- Use a heat-resistant connecting cable for fluid temperatures exceeding 90 °C.
- Lay the connecting cable in such a way that it does not make contact with the pipes or the pump.

7.2 Connection options

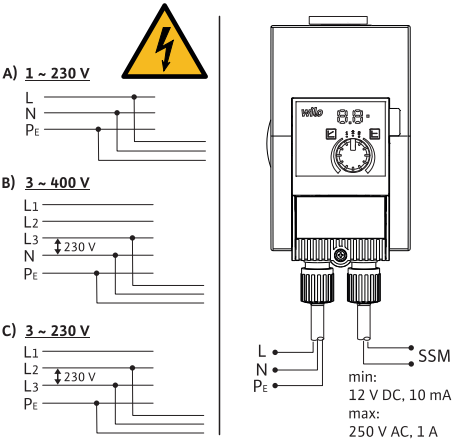

Fig. 3: Connection options

The pump can be connected to power supplies with the following voltage ratings:

- 1~ 230 V
- 3~ 400 V with neutral conductor
- 3~ 400 V without neutral conductor (upstream mains transformer)
- 3~ 230 V

7.3 Twin-head pumps

Only operate as main and standby pump with automatic fault-actuated switchover:

1. Individually connect and secure both motors.
2. Provide separate switchgear (e.g.,: Wilo-Connect module Yonos MAXO (accessories)).
3. Make identical settings.

7.4 Collective fault signal (SSM)

The contact of the collective fault signal (potential-free normally closed contact) can be connected to a building automation system. Internal contact is closed in the following cases:

- The pump has zero current.
- There is no fault.
- The control module has failed.



DANGER

Risk of fatal electrical shock!

Danger to life through voltage transmission, if mains and SSM pipe are led together through a 5-wire cable.

- Do not connect SSM pipe to protective low voltage.

Connection values

- Permitted minimum: 12 V DC, 10 mA
- Permitted maximum: 250 V AC, 1 A, AC 1
  During connection of the SSM pipe to the network potential:
- SSM phase = live wire L1

7.5 Connect



DANGER

Risk of fatal electrical shock!

Immediate risk of fatal injury if live components are touched.

- Electrical connection may only be carried out by a qualified electrician and in accordance with the applicable regulations!
- Before commencing work, switch off the power supply and secure it from being switched on again.

1. Prepare the cable as indicated in the Figure (Fig. X).
2. Unscrew the screw from the plug (Fig. XI).
3. Remove the plug.
4. Unscrew cable ducts (Fig. XII).
5. Flip open the plug.
6. Remove the elastic fastener from the cable ducts using a small screwdriver (Fig. XIII).
7. Guide the cable through the cable ducts to the connection sockets.
8. Connect the wires in the correct position (Fig. XIV).
9. Close the plug and unscrew cable ducts (Fig. XV).
10. Insert the plug and fasten with screw (Fig. XVI).
11. Restore the power supply.

8 Put into operation

8.1 Venting

1. Charge the system appropriately and ventilate.

► The pump is self-ventilating.

8.2 Flush

CAUTION

Property damage!

While using fluids with admixtures, property damage can occur due to the accumulation of chemicals.

- Flush system before commissioning.
- Flush out the pump before pouring in, refilling or replacing fluid.
- Remove the pump before pressure swing purging.
- Do not perform any chemical flushes.

8.3 Select operating mode

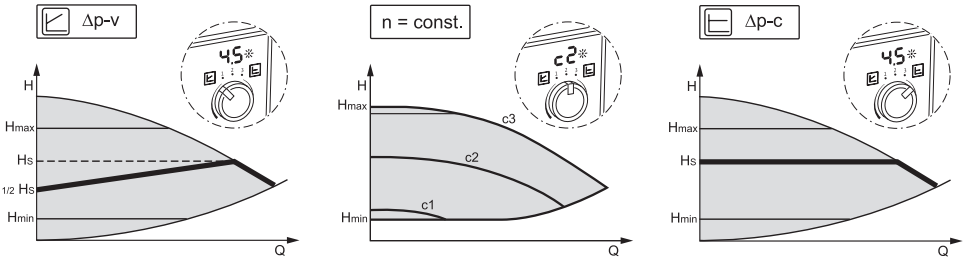

Fig. 4: Select operating mode

Control mode	Description
Variable differential pressure Δp-v	The control changes the differential pressure setpoint to be maintained by the pump linearly between reduced differential pressure H and H_{target}. The controlled differential pressure H decreases or increases with the flow rate.
Constant speed n = const.	The speed of the pump is kept at a set constant speed.
Constant differential pressure Δp-c	The control keeps the differential pressure created by the pump constant above the permitted flow rate at the selected differential pressure set-point $H_{setpoint}$ up to the maximum characteristic curve.

Control mode selection during heating operation

System type	System conditions	Recommended control mode
Heating/ventilation/air-conditioning with resistor in transfer section (space heater and thermostatic valve) ≤ 25 % of the total resistance	• Dual-pipe systems with thermostat/zone valves and low valve authority: — HN > 4 m — Very long outlet pipes — Heavily throttled line shut-off valves — Line differential pressure controller — High pressure losses in those system sections that are flowed through by the total volume flow (boiler, refrigerating machine, potentially heat exchanger, distribution pipes to the first junction) • Primary circuits with high pressure losses	**Δp-v**
Heating/ventilation/air-conditioning	• Constant volume flow • Hot water priority (c3) • Manual night setback via speed stage alignment (c1)	**Constant speed (c1, c2, c3)**
Heating/ventilation/air-conditioning with resistance in the generator/distributor circuit ≤ 25 % of the total resistance in transfer section (room radiator and thermostatic valve)	• Dual-pipe systems with thermostat/zone valves and high valve authority: — HN ≤ 2 m — Converted gravity system — Conversion to large temperature storage (e.g. district heating) — Low pressure losses in those system sections that are flowed through by the total volume flow (boiler, refrigerating machine, potentially heat exchanger, distribution pipes to the first junction) • Primary circuits with minor pressure losses • Underfloor heating with thermostat and zone valves • One-pipe system with thermostat and line shut-off valves	**Δp-c**

Control mode selection during drinking water operation

System type	System conditions	Recommended control mode
Domestic hot water circulation systems	Domestic hot water circulation systems with thermostatically controlled line shut-off valves	**Δp-v**
Domestic hot water circulation systems	Constant volume flow	**Constant speed (c1, c2, c3)**
Domestic hot water circulation systems	Domestic hot water circulation systems with thermostatically controlled line shut-off valves. • The differential pressure is kept constant at the set differential pressure setpoint H. Recommended for systems with balancing valves	**Δp-c**

8.4 Adjust operating mode and pump output

Factory settings heating pump

The pumps are delivered in control mode Δp-v. The required delivery head is preset to ½ of the maximal required delivery head (see pump data in the catalogue). Adjust operating mode and pump output according to system requirements.

Factory settings drinking water pump

The pumps are delivered in control mode Δp-c. The required delivery head is preset to ½ of the maximal required delivery head (see pump data in the catalogue). Adjust operating mode and pump output according to system requirements.

Adjust the settings

In the design, the system is configured at a certain duty point (hydraulic full load point at calculated maximum heating load or total resistance of the drinking water pipe network). When commissioning, adjust the pump output (delivery head) to the corresponding duty point. Select the alternative operating mode with constant speed.

1. Adjust desired operating mode with operating button.
   ► The LED display shows the operating mode (c1, c2, c3) or the setpoint in m (at Δp-c, Δp-v).
1. Adjust the setpoint by turning the operating button (only at Δp-c, Δp-v).

NOTICE

The setpoint is displayed on the LED display in 0.5 m increments (at set delivery head < 10 m) or in 1 m increments (at set delivery head > 10 m). Other steps are possible but not displayed.

9 Maintenance

9.1 Shutdown

The pump must be shut down before carrying out maintenance, repair or dismantling work.

DANGER

Risk of fatal electrical shock!

There is a risk of fatal injury from electric shock when working on electrical devices.

- Work on electrical components may only be carried out by qualified electricians!
- Switch off the voltage on all-poles of the pump and secure against unauthorised restart!
- Always switch off the power supply from the pump and if necessary SSM!
  – Due to the presence of dangerous contact voltage, work on the module must not be started until 5 minutes have elapsed!
- Check whether all connections (even potential-free contacts) are voltage-free!
- The pump may still be live even in voltage-free state. The rotor induces a contact voltage, which is also present at the motor contacts. Close the existing shut-off valves in front of and behind the pump!
- If the control module/Wilo plug is damaged, the pump must not be put into operation!
- In case of impermissible removal of operating elements on the control module, there is a risk of electrical shock if inner electrical components are touched!



WARNING

Risk of burns when touching the pump/system

Depending on the operating status of the pump and the system (fluid temperature), the entire pump can get very hot.

- Allow the system and pump to cool to room temperature!

9.2 Dismantling/installation

Before any dismantling/installation operation, make sure that the "Shutdown" chapter has been taken into consideration!



WARNING

Risk of burns when touching the pump/system

Depending on the operating status of the pump and the system (fluid temperature), the entire pump can get very hot.

- Allow the system and pump to cool to room temperature!



WARNING

Risk of scalding from hot fluids!

The fluid is under high pressure and can be very hot.
Before the installation or removal of the pump or the dismantling of the housing screws, observe the following:

- Allow the heating system to cool down completely.
- Close shut-off valves or drain the heating system.
- Drain the shut-off branch of the system!
- If no shut-off valves are fitted, drain the system!
- Follow the manufacturer's instructions and safety data sheets for possible additives in the system!

Comply with national regulations for accident prevention and also with the operator's internal work, company and safety regulations.



WARNING

Risk of injury!

Danger of injury caused by falling motor/pump after loosening the fastening screws!

- Use suitable lifting gear to secure the pump/motor against falling if necessary!
- Wear appropriate protective clothing (e.g. safety gloves)!



DANGER

Risk of fatal injury from magnetic field!

When dismantled, the permanent magnet rotor inside the pump can pose a risk of fatal injury for people with medical implants (e.g. pacemakers).

- Never remove the rotor.
  - If the unit consisting of impeller, bearing plate and rotor is pulled out of the motor, persons with medical aids, such as cardiac pacemakers, insulin pumps, hearing aids, implants or similar are at risk. Death, severe injury and damage to property may be the result. For such persons, a professional medical assessment is always necessary.
- There is a crushing hazard! When removing the rotor from the motor, it can be pulled back into its original position by the strong magnetic field.
  - If the rotor is outside the motor, magnetic objects may be attracted very suddenly. This can result in injury and damage to property.
- Electronic devices may be impaired functionally or damaged by the strong magnetic field of the rotor.

When assembled, the rotor's magnetic field is guided in the motor's iron core. However, there is no magnetic field outside the machine that is harmful to health or has a negative impact.

9.2.1 Dismantling/installation of the motor

Take into account the "Shutdown" chapter before dismantling/installing the motor!

- Close the existing shut-off valves in front of and behind the pump!
- If no shut-off valves are fitted, drain the system!

Dismantling the motor

1. Loosen motor fastening screws and remove the motor from the centring on the pump housing.

CAUTION

Damage to property!

If the motor head is separated from the pump housing during maintenance or repair work:

- Replace O-ring between motor head and pump housing!
- Mount the O-ring, untwisted, in the angled end of the bearing plate that faces the impeller!
- Ensure correct position of the O-ring!
- Perform leakage test for maximum permissible operating pressure!

Installing the motor

The motor is installed in reverse order of dismantling.

1. Insert the motor into the centring of the pump housing and insert the four motor fastening screws into the threaded holes.
2. Tighten motor fastening screws diagonally. Observe tightening torques! (see table "Tightening torques for motor fastening screws" [▶ 21]).

For commissioning of the pump, see the "Commissioning" chapter.

If only the control module has to be brought into another position, the motor need not be pulled out of the pump housing completely. The motor can be rotated in the pump housing into the desired position (follow permissible installation positions). See the “Aligning the motor head” [▶ 21] chapter.

NOTICE

In general, turn the motor head before the system is filled.

Perform leakage test!

10 Troubleshooting

10.1 Personnel requisition

The troubleshooting must only be performed by a qualified specialist, work on the electrical connection must only be performed by a qualified electrician.

10.2 Safety during troubleshooting

DANGER

Risk of fatal electrical shock!

There is a risk of fatal injury due to contact voltage after switching off the pump.

- Disconnect all-pole power supply before starting work.
- Begin work at least 5 minutes after disconnecting the power supply.

10.3 Error table

Error	Cause	Correction
Pump is not running with switched-on power supply.	Electric fuse defective.	Check fuse.
Pump is not running with switched-on power supply.	No voltage.	Check voltage.
Pump makes noises.	Cavitation due to insufficient suction pressure.	Maintain pressure/increase system pressure. Observe permissible pressure range.
Pump makes noises.	Cavitation due to insufficient suction pressure.	Check the delivery head and adjust where necessary.
Hot water does not get warm within a short period of time.	Setpoint set too low.	Increase setpoint.
Hot water does not get warm within a short period of time.	Setpoint set too low.	Set operating mode Δp-c.

10.4 Fault signals

- A signal is displayed.
- The fault signal LED lights up.
- The SSM contact opens.

- Switch off the pump and try a restart at regular intervals. During E10 switch off the pump permanently after 10 minutes.

No.	Fault	Cause	Remedy
E04	Undervoltage	Power supply on mains side too low.	Check mains voltage.
E05	Overvoltage	Power supply on mains side too high.	Check mains voltage.
E09[1)]	Turbine operation	Pump is operated backwards.	Check the flow and install non-return valve if necessary.
E10	Blocking	Rotor blocked.	Contact customer service.
E21[2) *]	Overload	Slow motor.	Contact customer service.
E23	Short-circuit	Motor current too high.	Contact customer service.
E25	Contacting/winding	Winding defective.	Contact customer service.
E30	Excessive temperature of module	Interior of module too warm.	Check operating conditions.
E31	Excessive power section temperature	Ambient temperature too high.	Check operating conditions.
E36	Electronics errors	Electronics defective.	Contact customer service.

If a fault cannot be repaired, contact a qualified specialist or customer service.

[1)] Only for pumps with P1 ≥ 200 W

[2)] In addition to the LED display, the fault signal LED is continuously illuminated in red.

[*] See also warning signal E21

10.5 Warning signals

- A signal is displayed.
- Fault signal LED does not light up.
- The SSM contact does not open.
- The pump is running at reduced performance.

No.	Fault	Cause	Remedy
E07	Generator operation	Pump hydraulics have fluid running through them.	Check system.
E11	Pump running dry	Air in the pump.	Check fluid pressure and volume.
E21[*)]	Overload	Slow motor. Pump is operated beyond its specifications (e.g. high module temperature). The speed is lower than during normal operation.	Check ambient conditions.

[*)] Also see fault message E21

11 Spare parts

Original spare parts may only be obtained from local installers and/or Wilo customer service. To avoid queries and order errors, please provide all data on the rating plate with every order.

12 Disposal

12.1 Information on the collection of used electrical and electronic products

Proper disposal and appropriate recycling of this product avoids environmental damage and risks to personal health.



NOTICE

Disposal in domestic waste is prohibited!

In the European Union this symbol may be included on the product, the packaging or the accompanying documentation. It means that the electrical and electronic products in question must not be disposed of along with domestic waste.

Please note the following points to ensure proper handling, recycling and disposal of the used products in question:

- Hand over these products at designated, certified collection points only.
- Observe the locally applicable regulations!

Please consult your local municipality, the nearest waste disposal site, or the dealer who sold the product to you for information on proper disposal. Further recycling information at http://www.wilo-recycling.com.

Subject to change without prior notice!





wilo



Local contact at
www.wilo.com/contact

WILO SE
Wilopark 1
44263 Dortmund
Germany
T +49 (0)231 4102-0
T +49 (0)231 4102-7363
wilo@wilo.com
www.wilo.com

Pioneering for You