Pioneering for You

Wilo-Stratos GIGA2.0-I/-D/-B



en Installation and operating instructions

2222520 • Ed.01/2024-08

Stratos GIGA2.0-I
https://qr.wilo.com/210

Stratos GIGA2.0-D
https://qr.wilo.com/209

Stratos GIGA2.0-B
https://qr.wilo.com/249

Fig. I: Stratos GIGA2.0-I / Stratos GIGA2.0-D – DN 100; 1,1 … 1,5 kW / Stratos GIGA2.0-B

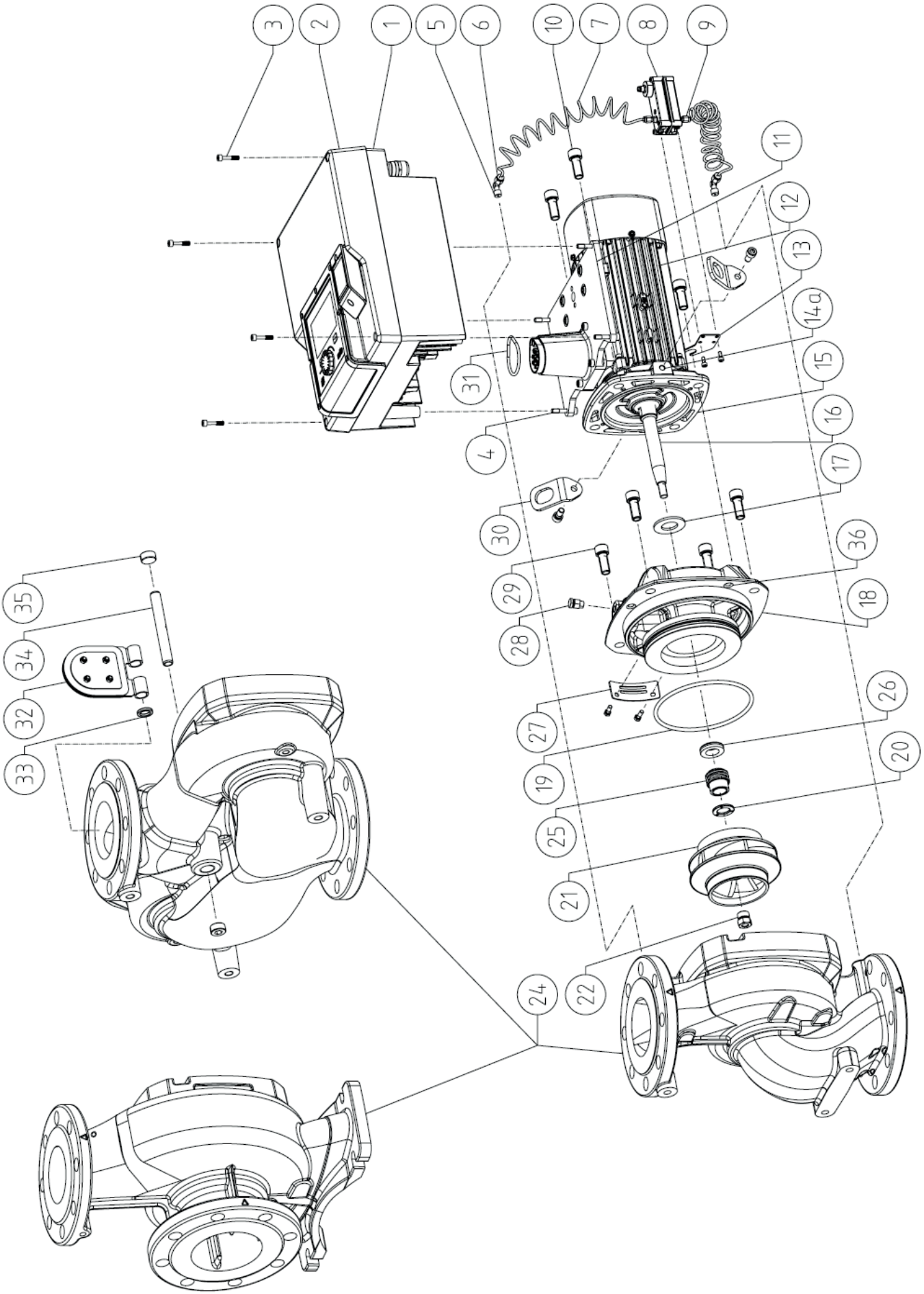

Fig. II: Stratos GIGA2.0-I / Stratos GIGA2.0-D – DN 32 … DN 100; 0,37 … 7,5 kW / Stratos GIGA2.0-B

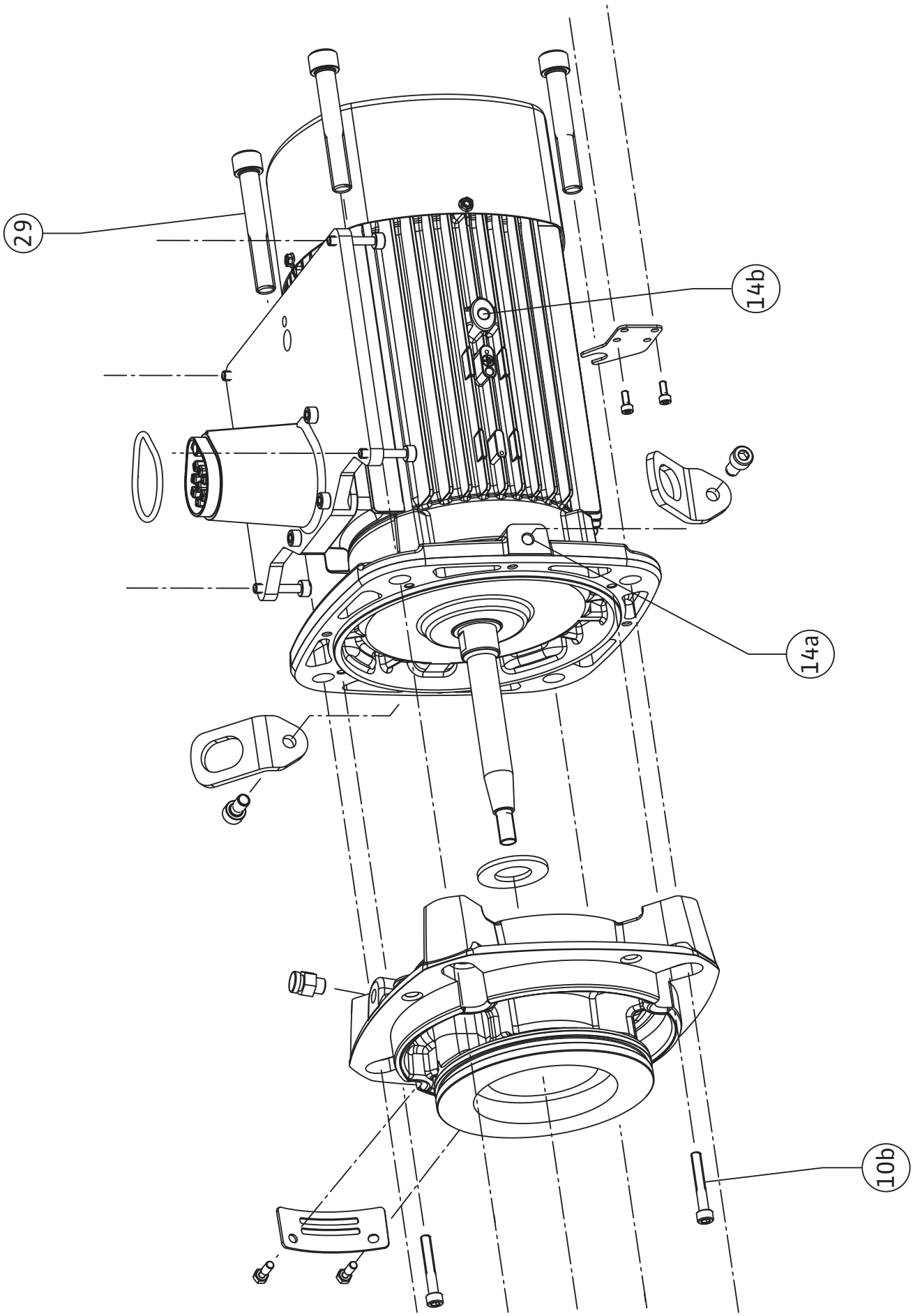

Fig. III: Stratos GIGA2.0-I / Stratos GIGA2.0-D – DN 100 … DN 125; 2,2 … 4,0 kW

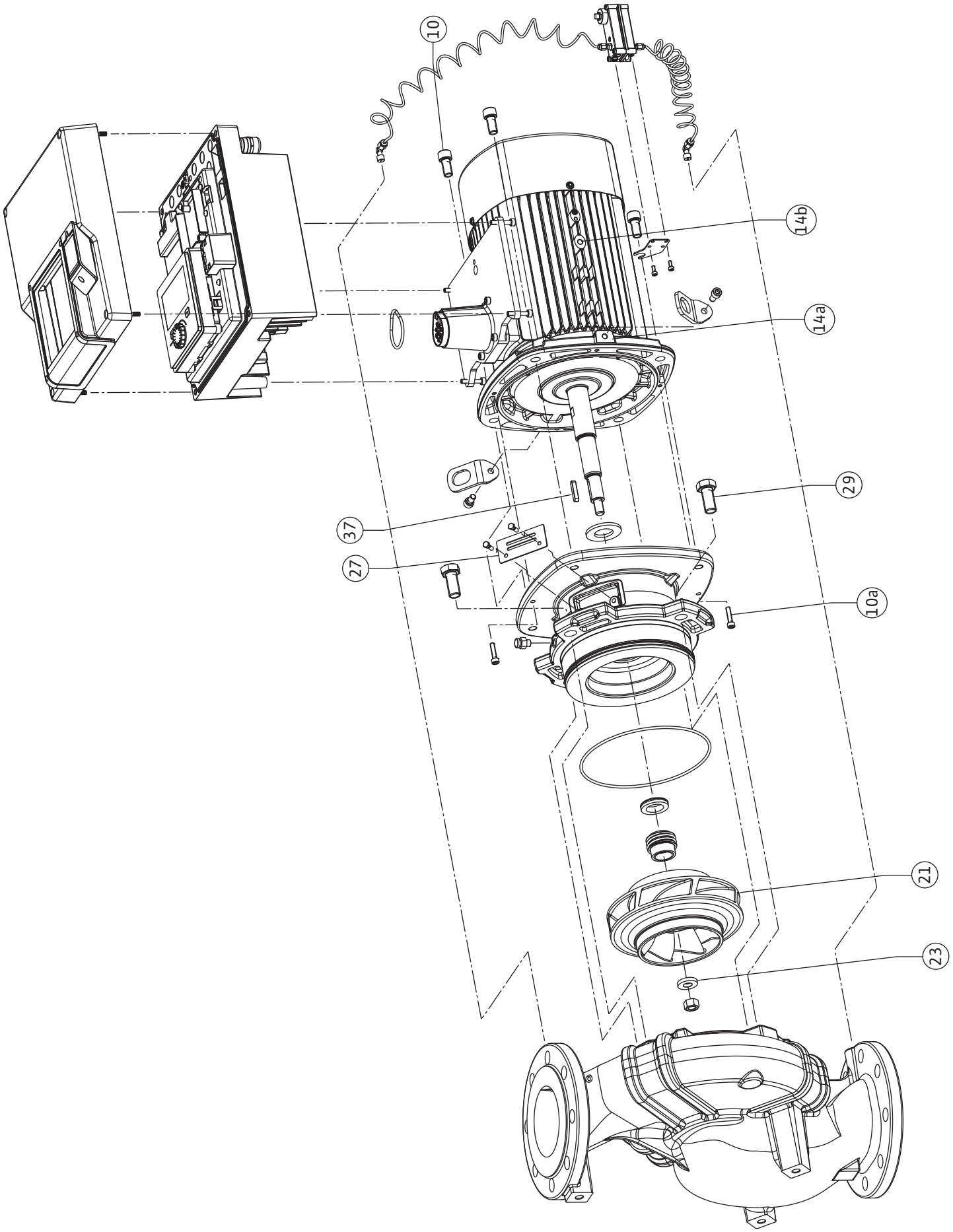

Fig. IV: Stratos GIGA2.0-I / Stratos GIGA2.0-D – DN 100 … DN 125; 5,5 … 7,5 kW

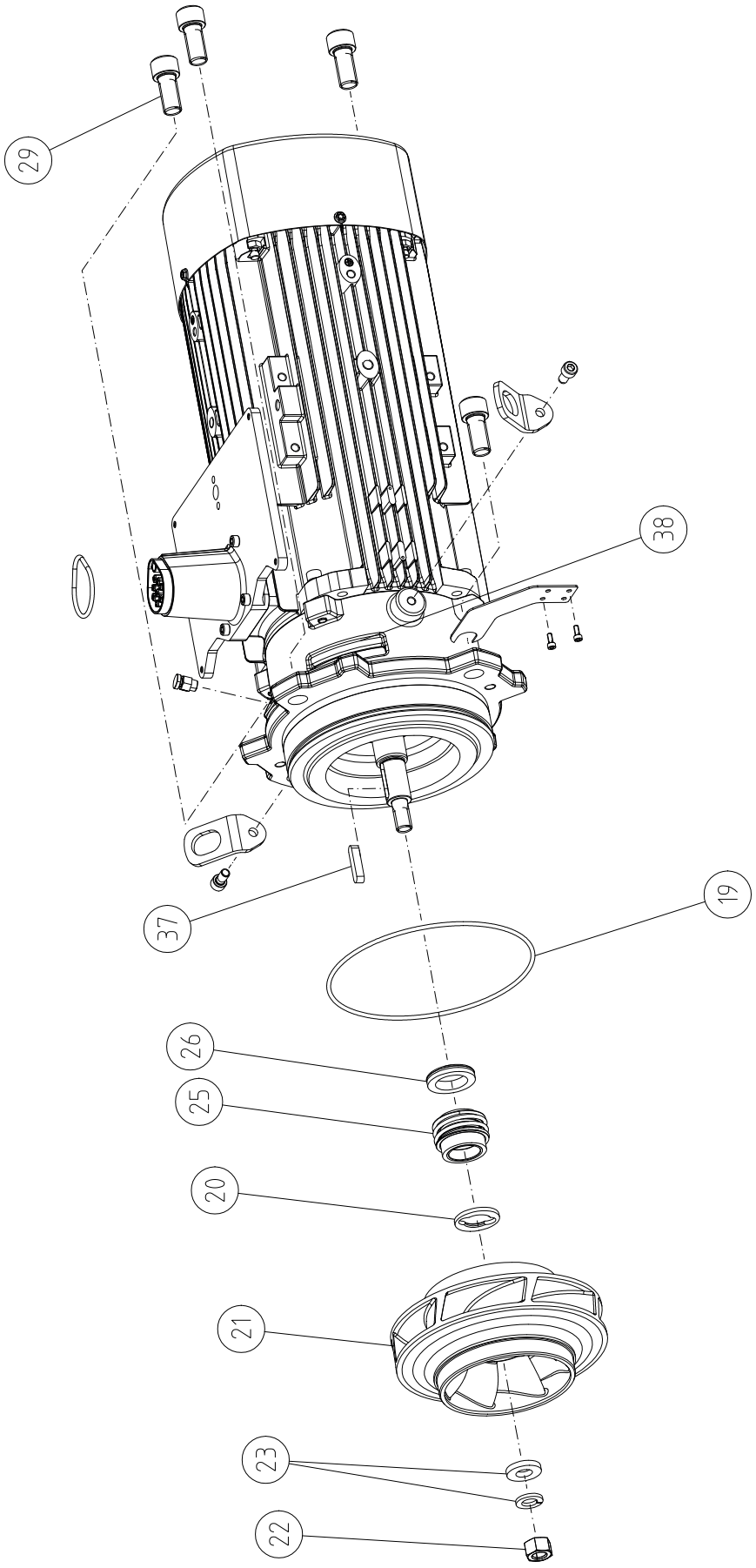

Table of Contents

1 General ... 9
- 1.1 About these instructions ... 9
- 1.2 Copyright ... 9
- 1.3 Subject to change ... 9

2 Safety ... 9
- 2.1 Identification of safety instructions ... 9
- 2.2 Personnel qualifications ... 10
- 2.3 Electrical work ... 11
- 2.4 Transport ... 12
- 2.5 Installing/dismantling ... 12
- 2.6 Maintenance tasks ... 13

3 Intended use and misuse ... 13
- 3.1 Intended use ... 13
- 3.2 Misuse ... 13
- 3.3 Operator responsibilities ... 14

4 Description of the pump ... 15
- 4.1 Scope of delivery ... 17
- 4.2 Type key ... 18
- 4.3 Technical data ... 18
- 4.4 Accessories ... 20

5 Transport and storage ... 20
- 5.1 Shipping ... 20
- 5.2 Transport inspection ... 20
- 5.3 Storage ... 20
- 5.4 Transport for installation/dismantling purposes ... 21

6 Installation ... 22
- 6.1 Personnel qualifications ... 22
- 6.2 Operator responsibilities ... 22
- 6.3 Safety ... 22
- 6.4 Permitted installation positions and change of the arrangement of components before the installation ... 24
- 6.5 Preparing the installation ... 29
- 6.6 Twin-head pump installation/Y-pipe installation ... 34
- 6.7 Installation and position of additional sensors to be connected ... 35

7 Electrical connection ... 35
- 7.1 Mains connection ... 41
- 7.2 SSM and SBM connection ... 43
- 7.3 Connection of digital, analogue and bus inputs ... 43
- 7.4 Differential pressure sensor connection ... 44
- 7.5 Wilo Net connection ... 44
- 7.6 Turn of the display ... 45

8 Installation of Wilo-Smart Connect module BT ... 46

9 Installation of CIF module ... 47

10 Commissioning ... 48
- 10.1 Filling and venting ... 48
- 10.2 Procedure after switching on the power supply during initial commissioning ... 49
- 10.3 Description of operating elements ... 50
- 10.4 Pump operation ... 50

11 Setting the control functions ... 55
- 11.1 Control functions ... 56
- 11.2 Additional control functions ... 58
- 11.3 Settings assistant ... 59
- 11.4 Pre-defined applications in the setting assistant ... 65
- 11.5 Settings menu - Set auto control ... 68
- 11.6 Adjustment - Manual operation ... 72

12 Double pump operation ... 73
- 12.1 Dual pump management ... 74
- 12.2 Twin-head pump behaviour ... 75
- 12.3 Settings menu – Twin-head pump operation ... 75
- 12.4 Display for twin-head pump operation ... 77

13 Communication interfaces: Setting and function ... 78
- 13.1 Application and function of SSM relay ... 79
- 13.2 Application and function of SBM relay ... 80
- 13.3 SSM/SBM relay forced control ... 81
- 13.4 Application and function of the digital control inputs DI1 and DI2 ... 81
- 13.5 Application and function of the analogue inputs AI1 ... AI4 ... 85
- 13.6 Application and function of the Wilo Net interface ... 92
- 13.7 Setting the Bluetooth interface Wilo-Smart Connect module BT ... 93
- 13.8 Application and function of CIF module ... 94

14 Device settings ... 94
- 14.1 Display brightness ... 94
- 14.2 Country, language, units ... 94
- 14.3 Bluetooth On/Off ... 95
- 14.4 Key lock on ... 95
- 14.5 Device information ... 96
- 14.6 Pump kick ... 96

15 Diagnostics and measured values ... 96
- 15.1 Diagnostics help ... 96
- 15.2 Heating/cooling quantity measurement ... 97
- 15.3 Operating data/statistics ... 98
- 15.4 Maintenance ... 99
- 15.5 Configuration storage/data storage ... 100

16 Restore and reset ... 101
- 16.1 Restore points ... 101
- 16.2 Factory setting ... 101

17 Help ... 103
- 17.1 Help system ... 103
- 17.2 Service contact ... 103

18 Faults, causes and remedies ... 103
- 18.1 Mechanical faults without error messages ... 104
- 18.2 Diagnostics help ... 104
- 18.3 Error messages ... 105
- 18.4 Warning messages ... 106
- 18.5 Configuration warnings ... 110

19 Maintenance ... 112
- 19.1 Air supply ... 113
- 19.2 Maintenance work ... 114

20 Spare parts 122

21 Disposal..... 122

21.1 Oils and lubricants 122

21.2 Information on the collection of used electrical and electronic products..... 122

21.3 Batteries/rechargeable batteries..... 123

1 General

1.1 About these instructions

These instructions form part of the product. Compliance with the instructions is essential for correct handling and use:

- Read the instructions carefully before all activities.
- Keep the instructions in an accessible place at all times.
- Observe all product specifications.
- Observe the markings on the product.

The language of the original operating instructions is German. All other languages of these instructions are translations of the original operating instructions.

1.2 Copyright

WILO SE © 2024

The reproduction, distribution and utilisation of this document in addition to communication of its contents to others without express consent is prohibited. Offenders will be held liable for payment of damages. All rights reserved.

1.3 Subject to change

Wilo shall reserve the right to change the listed data without notice and shall not be liable for technical inaccuracies and/or omissions. The illustrations used may differ from the original and are intended as an exemplary representation of the product.

2 Safety

This chapter contains basic instructions for the individual life cycles of the product. Failure to observe this information carries the following risks:

- Danger to persons from electrical, mechanical and bacteriological effects as well as electromagnetic fields
- Environmental damage from discharge of hazardous substances
- Damage to property
- Failure of important product functions
- Failure of required maintenance and repair procedures

Failure to observe the instructions will result in the loss of any claims for damages.

The directions and safety instructions in the other sections must also be observed!

2.1 Identification of safety instructions

These installation and operating instructions set out safety instructions for preventing personal injury and damage to property. These safety instructions are shown differently:

- Safety instructions relating to personal injury start with a signal word, are **preceded by a corresponding symbol** and are shaded in grey.



DANGER

Type and source of the danger!

Consequences of the danger and instructions for avoidance.

- Safety instructions relating to property damage start with a signal word and are displayed **without** a symbol.

CAUTION

Type and source of the danger!

Consequences or information.

Signal words

- **DANGER!**
  Failure to follow the instructions will result in serious injuries or death!
- **WARNING!**
  Failure to follow the instructions can lead to (serious) injury!
- **CAUTION!**
  Failure to follow the instructions can lead to potentially irreparable property damage.
- **NOTICE!**
  Useful information on handling the product

Symbols

These instructions use the following symbols:

 General danger symbol

 Danger of electric voltage

 Warning of hot surfaces

 Warning of magnetic fields

 Warning of high pressure

 Notes

Follow all information that appears on the product and ensure that it remains permanently legible:

- Warning and hazard notices
- Rating plate
- Direction of rotation arrow/symbol for direction of flow
- Labelling of connections

Identifying Cross References

The name of the section or table is in inverted commas [“ ”]. The page number follows in square brackets [ ].

2.2 Personnel qualifications

Staff must:

- be instructed about locally applicable regulations governing accident prevention,
- have read and understood the installation and operating instructions.

Personnel must have the following qualifications:

- Electrical work: a qualified electrician must carry out the electrical work.
- Installation/dismantling: The technician must be trained in the use of the necessary tools and fixation materials.
- The product must be operated by persons who have been instructed on how the complete system functions.
- Maintenance work: The technician must be familiar with the use of operating fluids and their disposal.

Definition of "qualified electrician"

A qualified electrician is a person with appropriate technical education, knowledge and experience who can identify **and** prevent electrical hazards.

The operator must confirm and ensure the field of authority, the competence and the monitoring of the personnel. If the personnel do not possess the necessary knowledge, they must be trained and instructed. If required, this can be carried out by the product manufacturer at the operator's request.

2.3 Electrical work

- Have electrical work carried out by a qualified electrician.
- When connecting to the local power supply system, comply with the nationally applicable guidelines, standards and regulations as well as specifications issued by the local energy supply companies.
- Before commencing work, disconnect the product from the mains and secure it against being switched on again.
- Give personnel training on how to establish the electrical connection and the methods for switching off the product.
- Protect the electrical connection with a residual-current device (RCD).
- Observe the technical information in these installation and operating instructions as well as on the rating plate.
- Earth the product.
- Comply with the manufacturer's specifications when connecting the product to electrical switching systems.
- Have a defective connection cable replaced immediately by a qualified electrician.
- Never remove operating elements.
- If radio waves (Bluetooth) lead to hazards (e.g. in hospitals), they must be switched off or removed if they are not desired or prohibited at the installation location.



DANGER

When dismantled, the permanent magnet rotor inside the pump can pose mortal danger for people with medical implants (e.g. pacemakers).

- Follow the general behavioural guidelines that apply to handling electrical devices!
- Do not open the motor!
- Dismantling and installation of the rotor may only be carried out by Wilo customer service! If you have been fitted with a pacemaker, you must **not** carry out this kind of work!



NOTICE

The magnets inside the motor do not pose a danger **provided the motor is completely assembled**. Persons with pacemakers can approach the pump without restrictions.

2.4 Transport

- Wear protective equipment:
  - Safety gloves for protection against cuts
  - Safety shoes
  - Sealed safety glasses
  - Safety helmet (when using lifting equipment)
- Only use legally specified and approved lifting slings.
- Select the lifting sling based on the prevailing conditions (weather, slinging point, load etc.).
- Always attach the lifting sling to the designated slinging points (lifting eyes).
- Position the lifting accessory in a way that ensures stability during use.
- When using lifting equipment, a second person must be present to coordinate the procedure if required (e.g. if the operator's field of vision is blocked).
- Persons must not stand underneath suspended loads. Do **not** move suspended loads over workplaces where people are present.

2.5 Installing/dismantling

- Wear the following protective equipment:
  - Safety shoes
  - Safety gloves for protection against cuts
  - Safety helmet (when using lifting equipment)
- Locally applicable laws and regulations on work safety and accident prevention must be complied with.
- Disconnect the device from the mains and secure it against being switched on again without authorisation.
- All rotating parts must be at a standstill.
- Close the gate valve in the inlet and in the pressure pipe.
- Provide adequate aeration in enclosed spaces.
- Make sure that there is no risk of explosion when carrying out any type of welding work or work with electrical devices.

2.6 Maintenance tasks

- Wear the following protective equipment:
  - Sealed safety goggles
  - Safety shoes
  - Safety gloves for protection against cuts
- Locally applicable laws and regulations on work safety and accident prevention must be complied with.
- The procedure described in the installation and operating instructions for shutting down the product/unit must be strictly observed.
- Only original parts from the manufacturer may be used for maintenance and repairs. The use of any non-original parts releases the manufacturer from any liability.
- Disconnect the device from the mains and secure it against being switched on again without authorisation.
- All rotating parts must be at a standstill.
- Close the gate valve in the inlet and in the pressure pipe.
- Collect any leakage of fluid and operating fluid immediately and dispose of it according to the locally applicable guidelines.
- Store tools at the designated locations.
- After completing work, reattach all safety and monitoring devices and check that they function properly.

3 Intended use and misuse

3.1 Intended use

The glanded pumps of the Stratos GIGA2.0 series are intended for use as circulators in building services.

They may be used for:

- Hot-water heating systems
- Cooling and cold water circulation systems
- Industrial circulation systems
- Heat carrier circuits

Installation within a building:

Glanded pumps are to be installed in dry, well-ventilated, frost-proof rooms.

Installation outside a building (outdoor installation)

- Observe permissible environmental conditions and protection class.
- Install the pump in a housing as weather protection. Observe permissible ambient temperatures (see “Technical data” [▶ 18] table).
- Protect the pump against the effects of weather, for example, direct sunlight, rain and snow.
- Protect the pump so that the condensate drain openings remain free of dirt.
- Take suitable measures to prevent the formation of condensation water.

Intended use includes compliance with these instructions as well as the information and markings on the pump.
Any use beyond the intended use is considered misuse and will result in the loss of all liability claims.

3.2 Misuse

The operational reliability of the supplied product is only guaranteed for intended use in accordance with chapter "Intended use" of the installation and operating instructions. The limit values must not fall below or exceed those values specified in the catalogue/data sheet.



WARNING

Misuse of the pump can lead to dangerous situations and damage!

Non-permitted substances in the fluid can destroy the pump. Abrasive solids (e.g. sand) increase pump wear.
Pumps without an Ex rating are not suitable for use in potentially explosive atmospheres.

- Never use fluids other than those approved by the manufacturer.
- Highly flammable materials/fluids should always be kept at a safe distance from the device.
- Never allow unauthorised persons to carry out work.
- Never operate the pump beyond the specified limits of use.
- Never carry out unauthorised conversions.
- Use authorised accessories and original spare parts only.

3.3 Operator responsibilities

- Provide installation and operating instructions in a language which the personnel can understand.
- Make sure that personnel are suitably trained for the specified work.
- Verify the area of responsibility and individual responsibilities of personnel.
- Provide the necessary protective equipment and make sure that personnel wear it.
- Ensure that safety and information signs mounted on the device are always legible.
- Train personnel with regard to the operating principles of the system.
- Eliminate risks from electrical current.
- Equip hazardous components (extremely cold, extremely hot, rotating, etc.) with a guard to be provided by the customer.
- Remove leakages of hazardous fluids (e.g. explosive, toxic or hot) in such a way that no danger is posed to persons or the environment. Comply with national statutory provisions.
- Keep highly flammable materials at a safe distance from the product.
- Ensure compliance with the regulations for accident prevention.
- Ensure compliance with local directives or general directives [e.g. IEC, VDE, etc.] and instructions from local energy supply companies.

Follow all information that appears on the product and ensure that it remains permanently legible:

- Warning and hazard notices
- Rating plate
- Direction of rotation arrow/symbol for direction of flow
- Labelling of connections

This device can be used by children from 8 years of age as well as people with reduced physical, sensory or mental capacities or lack

of experience and knowledge if they are supervised or instructed on the safe use of the device and they understand the dangers that can occur. Children are not allowed to play with the device. Cleaning and user maintenance must not be carried out by children without supervision.

4 Description of the pump

The Stratos GIGA2.0 high-efficiency pump is a glanded pump with integrated power adjustment and "Electronic Commutated Motor" (ECM) technology. The pump is configured as a single-stage low-pressure centrifugal pump with flange connection and mechanical seal.

The pump can be installed both directly as a pipe installation in sufficiently secured pipes or be placed on a foundation base. Mounting brackets (accessories) are available for installation on a foundation base.

The pump housing of the Stratos GIGA2.0-I/-D has an in-line design; i.e. the flanges on the suction and discharge side are on one axis.
The pump housing of the Stratos GIGA2.0-B is a spiral housing with flange dimensions according to DIN EN 733. The pump has a cast-on or screwed-on pump support foot. Assembly on a block is recommended.

NOTICE

Blind flanges (accessories) are available for all pump types/housing sizes from the Stratos GIGA2.0-D series. This way a drive can remain in operation when replacing the motor impeller unit (motor with impeller and electronic module).

Fig. I to IV shows an exploded view drawing of the pump with the main components. The pump structure is explained in detail below.

Arrangement of the main components according to Fig. I to IV of the table "Arrangement of the main components":

No.	Component
1	Electronic module lower part
2	Electronic module upper part
3	Fastening screws of the electronic module upper part, 4x
4	Fastening screws of the electronic module lower part, 4x
5	Clamping ring screw connection of the pressure sensing line (housing side), 2x
6	Union nuts of the clamping ring screw connection (housing side), 2x
7	Pressure sensing line, 2x
8	Differential pressure sensor (DPS)
9	Union nuts of the clamping ring screw connection (DPS side), 2x
10	Fastening screw of the motor, main fastening, 4x
10a	2x auxiliary fastening screws
10b	4x auxiliary fastening screws
11	Motor adapter for electronic module
12	Motor housing
13	DPS holder
14a	Fixation points for transport lugs on motor flange, 2x
14b	Fixation points for transport lugs on motor housing, 2x
15	Motor flange
16	Motor shaft
17	Thrower
18	Lantern

No.	Component
19	O-ring
20	Spacer on mechanical seal
21	Impeller
22	Impeller nut
23	Impeller nut washer
24	Pump housing
25	Rotating unit on mechanical seal
26	Stationary ring on mechanical seal
27	Protective plate
28	Air vent valve
29	Fastening screws from the motor impeller unit, 4x
30	Transport lug, 2x
31	O-ring for contacting
32	Twin-head pump flap
33	Shim of twin-head pump flap
34	Axle of twin-head pump flap
35	Axle bore screw plug, 2x
36	Thread für forcing screw
37	Key
38	Lantern window

Table 1: Arrangement of the main components

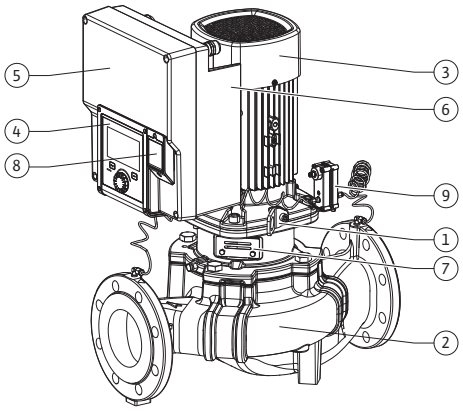

Fig. 1: Pump overview

Item	Name	Explanation
1	Transport lugs	Used for transporting and lifting the components. See “Installation” [▶ 22] section.
2	Pump housing	Install according to “Installation” section.
3	Motor	Drive unit. Forms the drive together with the electronic module.
4	Graphic display	Provides information about settings and pump status. Self-explanatory user interface for setting the pump.
5	Electronic module	Electronic unit with graphic display.
6	Electrical fan	Cools down the electronic module.
7	Protective plate in front of lantern window	Protects against rotating motor shaft.
8	Slot for Wilo-Smart Connect module BT	Wilo Connectivity Interface as slot for the Bluetooth module
9	Differential pressure sensor	2 ... 10 V sensor with capillary tube connections on flanges of suction and discharge side

Table 2: Description of the pump

- Item 3: The motor with mounted electronic module can be rotated relative to the lantern. Observe the instructions in the “Permitted installation positions and change of the arrangement of components before installation” [▶ 24] section.
- Item 4: The display can be rotated in 90° steps as required. (see section “Electrical connection” [▶ 35]).
- Item 6: An unobstructed and free air flow must be ensured around the electric fan. (see “Installation” [▶ 22] section).
- Item 7: The protective plate must be dismantled for the leakage check. Observe the safety instructions in “Commissioning” [▶ 48] section!
- Item 8: for installing the Wilo-Smart Connect module BT, see “Installation Wilo-Smart Connect module BT” [▶ 46] section.

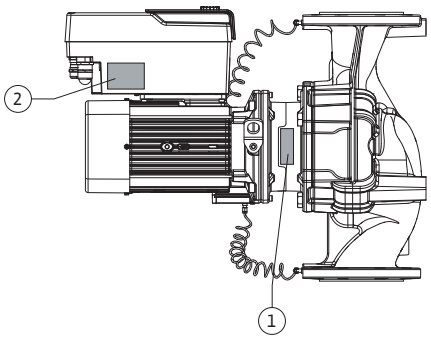

Fig. 2: Rating plates

Rating plates (Fig. 2)

1	Pump rating plate	2	Drive rating plate

- There is a serial number on the pump rating plate. It must be specified e.g. for ordering spare parts.
- The drive rating plate is located on the side of the electronic module. The electrical connection must be designed according to the specifications on the drive rating plate.

Functional modules (Fig. 3)

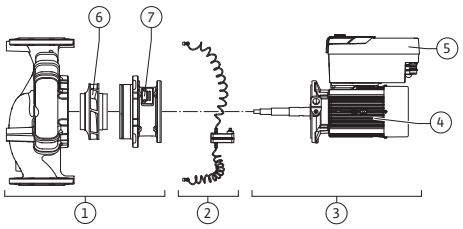

Fig. 3: Functional assemblies

Item	Name	Description
1	Hydraulic unit	The hydraulic unit consists of pump housing, impeller and lantern.
2	Differential pressure sensor (optional)	Differential pressure sensor with connection and fixation elements
3	Drive	The drive consists of a motor and an electronic module.
4	Motor	DN 32 to DN 125 up to motor power 4.0 kW: Lantern can be dismantled from the motor flange. DN 100 to DN 125 with motor power 5.5 to 7.5 kW: with integrated pump lantern.
5	Electronic module	Electronic unit
6	Impeller	
7	Lantern	

Table 3: Functional assemblies

The motor drives the hydraulic unit. The electronic module takes over the control of the motor.

The hydraulic unit is not a ready-to-install assembly due to the continuous motor shaft. It is disassembled for most maintenance and repair work. For information on maintenance and repair work, see “Maintenance” [▶ 112] section.

Motor impeller unit

The impeller and lantern together with the motor form the motor impeller unit (Fig. 4).

The motor impeller unit can be separated from the pump housing for the following purposes:

- The motor with the electronic module must be turned to a different relative position to the pump housing.
- Access to the impeller and mechanical seal is required.
- The motor and hydraulic unit must be separated.

The pump housing can remain in the pipe.

Observe “Permitted installation positions and change of the arrangement of components before installation” [▶ 24] section and the “Maintenance” [▶ 112] section.

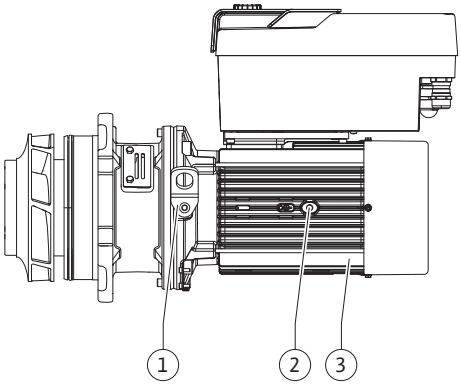

Fig. 4: Motor impeller unit

4.1 Scope of delivery

- Pump
- Installation and operating instructions and declaration of conformity
- Wilo-Smart Connect Module BT
- Threaded cable glands with sealing inserts

4.2 Type key

Example: Stratos GIGA2.0-I 65/1-37/M-4.0-xx	
Stratos GIGA	Pump designation
2.0	Second generation
-I	In-line single pump
-D	Double in-line pump
-B	Monobloc pump
65	Flange connection DN 65 (discharge flange on monobloc pumps)
1-37	Continuously adjustable setpoint height 1: Minimum delivery head in m 37: Maximum delivery head in m at Q = 0 m³/h
M-	Variant with power supply 1~230 V
4.0	Rated power in kW
-xx	Variant, e.g. R1

Table 4: Type key

For an overview of all product variants, see Wilo-Select/Catalogue.

4.3 Technical data

Property	Value	Note
Electrical connection:		
Voltage range	3~380 V to 3~440 V (± 10%), 50/60 Hz	Supported mains types: TN, TT, IT[1)]
Voltage range	1~220 V to 1~240 V (± 10%), 50/60 Hz	Supported mains types: TN, TT, IT[1)]
Performance range	3~ 0.55 kW ... 7.5 kW	Depending on pump type
Performance range	1~ 0.37 kW to 1.5 kW	Depending on pump type
Speed range	450 rpm to 4800 rpm	Depending on pump type
Ambient conditions[2)]:		
Protection class	IP55	EN 60529
Ambient temperature during operation min./max.	0 °C to +50 °C	Lower or higher ambient temperatures on request
Temperature during storage min./max.	-30 °C to +70 °C	> +60 °C limited to a duration of 8 weeks.
Temperature during transport min./max.	-30 °C to +70 °C	> +60 °C limited to a duration of 8 weeks.
Relative humidity	< 95 %, non-condensing	
Installation height max.	2000 m above sea level	
Insulation class	F	
Pollution degree	2	DIN EN 61800-5-1
Motor protection	Integrated	
Overvoltage protection	Integrated	
Overvoltage category	OVC III + SPD/MOV[3)]	Overvoltage Category III + Surge Protective Device/ Metal Oxide Varistor
Protection function control terminals	SELV, galvanically isolated	

Property	Value	Note
Electromagnetic compatibility[7)]		
Interference emission in acc. with: Interference immunity in acc. with:	EN 61800-3:2018 EN 61800-3:2018	Residential environment[6)] Industrial environment
Sound-pressure level[4)]	$L_{pA,1\,m}$ < 74 dB (A) | ref. 20 µPa	Depending on pump type
Nominal diameters DN	Stratos GIGA2.0-I/ Stratos GIGA2.0-D: 32/40/50/65/80/100/125 Stratos GIGA-B: 32/40/50/65/80	
Pipe connections	Flanges PN 16	EN 1092-2
Max. permissible operating pressure	16 bar (up to +120 °C) 13 bar (up to +140 °C)	
Permissible min./max. fluid temperature	-20 °C to +140 °C	Depending on the fluid
Permissible fluids[5)]	Heating water in accordance with VDI 2035 Part 1 and Part 2 Cooling/chilled water Water-glycol mixture up to 40 % Vol. Water-glycol mixture up to 50 % Vol. Heat transfer oil Other fluids	Standard version Standard version Standard version Only for special version Only for special version Only for special version

[1)] TN and TT power supplies with earthed live wires are not permitted.

[2)] For more detailed, product-specific information such as power consumption, dimensions and weights, refer to the technical documentation in the catalogue or Wilo-Select online.

[3)] Over Voltage Category III + Surge Protective Device/Metall Oxid Varistor

[4)] Average value of the sound-pressure levels on a spatially rectangular measuring surface at a distance of 1 m from the pump surface in accordance with DIN EN ISO 3744.

[5)] For more information about permissible fluids, see the “Fluids” section.

[6)] In the case of the DN 100 and DN 125, pump types with motor powers of 2.2 and 3 kW, EMC irregularities can occur under unfavourable circumstances when used in residential environments with low electrical power in the conducted range. In this case, please contact WILO SE so that together we can find a quick and suitable shutdown measure.

[7)]Stratos GIGA2.0-I/-D/-B is a professional device within the meaning of EN 61000-3-2

Table 5: Technical data

Additional information CH	Permissible fluids
Heating pumps	Heating water (in accordance with VDI 2035/VdTÜV Tch 1466/**CH: in accordance with SWKI BT 102-01)** ... No oxygen binding agents, no chemical sealants (ensure closed system from corrosion perspective according to VDI 2035 **(CH: SWKI BT 102-01)**; rework leaky points).

Fluids

Water-glycol mixtures or fluids with a different viscosity than pure water increase the power consumption of the pump. Only use mixtures with corrosion protection. **Observe the relevant manufacturer's specifications!**

- The fluid must be sediment-free.
- Wilo's approval must be obtained for the use of other fluids.
- Mixtures with a proportion of glycol of > 10 % influence the Δp-v characteristic curve and the flow calculation.
- The compatibility of the standard seal/standard mechanical seal with the fluid is generally given under normal system conditions.
  Special circumstances may require special seals, for example:
  - solids, oils or EPDM-attacking substances in the fluid,
  - air content in the system, etc.

Observe the safety data sheet for the fluid to be pumped!

NOTICE

When using water-glycol mixtures, the use of an S1 variant with a corresponding mechanical seal is generally recommended.

4.4 Accessories

Accessories must be ordered separately.

- 3 mounting brackets (Stratos GIGA2.0-I/-D) with fixation material for installation on a base
- Blind flanges for twin-head pump housing
- Installation aid for mechanical seal (incl. mounting bolts)
- CIF module PLR for connecting to PLR/interface converter
- CIF module LON for connection to the LONWORKS mains network
- CIF module BACnet
- CIF module Modbus
- CIF module CANopen
- CIF module Ethernet Multi-protocol (Modbus TCP, BACnet/IP)
- Differential pressure sensor DPS 2 ... 10 V
- Differential pressure sensor DPS 4 ... 20 mA
- Temperature sensor PT1000 AA
- Sensor sleeves for the installation of temperature sensors in the pipe
- Stainless steel screwed connections differential pressure sensor
- Intermediate flange connecting piece F
- Adapter kit for glanded pumps

For a detailed list, consult the catalogue and spare parts documentation.

NOTICE

CIF modules and Wilo-Smart Connect module BT may only be plugged in when the pump is voltage-free.

5 Transport and storage

5.1 Shipping

The pump is secured to a pallet ex works, packaged in a box and protected against dirt and moisture.

5.2 Transport inspection

Check delivery immediately for damage and completeness. Defects must be noted on the freight documentation! Defects must be notified to the transport company or the manufacturer immediately on the day of receipt of shipment. Subsequently notified defects can no longer be claimed for.

Only remove the outer packaging at the place of utilisation to ensure that the pump is not damaged during transport.

5.3 Storage

CAUTION

Damage due to incorrect handling during transport and storage!

Protect the product from moisture, frost and mechanical damage during transport and temporary storage.

Leave stickers on the pipe connections so that no dirt and other foreign matter can get into the pump housing.

To avoid scoring at the bearings and sticking, turn the pump shaft once a week using an Allen key (Fig. 5).

If a longer storage time is required, contact Wilo for preservation measures.

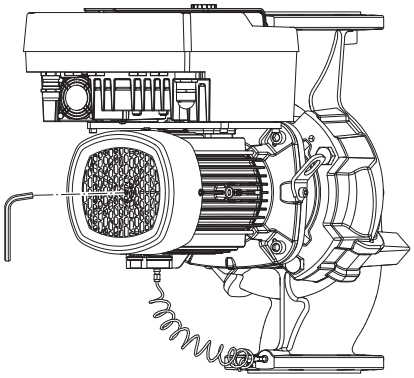

Fig. 5: Turning the shaft

WARNING

Risk of injury due to incorrect transport!

If the pump is transported again at a later date, it must be packaged so that it cannot be damaged during transport. Use the original packaging for this, or choose equivalent packaging.
Damaged transport lugs can break off and cause considerable personal injury. Check the transport lugs before use for damage and secure fixation.

5.4 Transport for installation/dismantling purposes

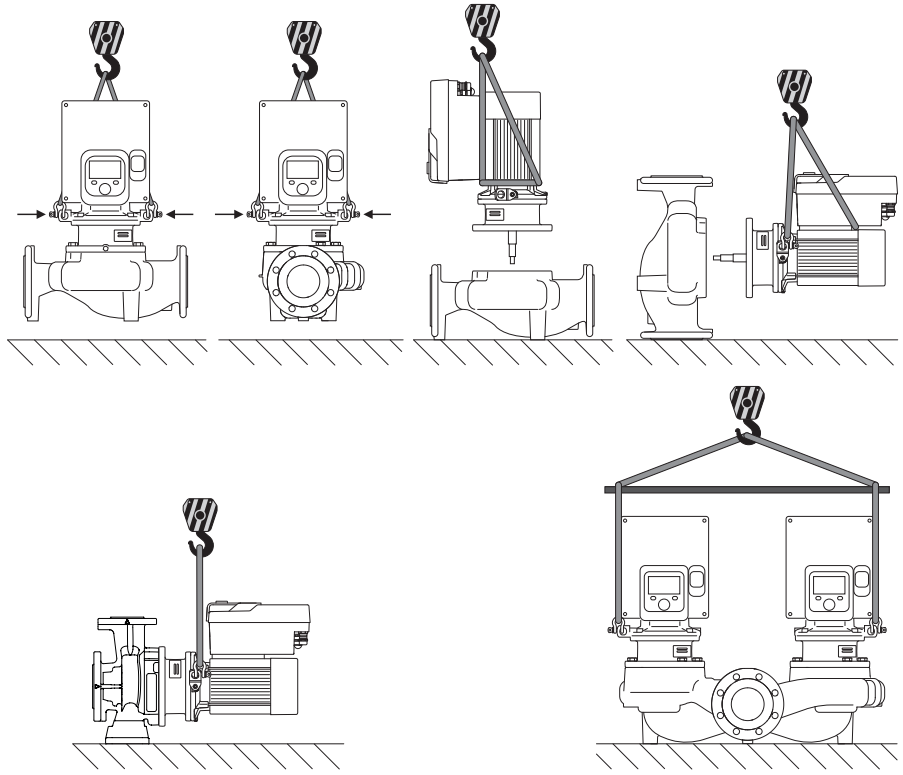

Fig. 6: Lifting direction

The pump must be transported using approved lifting accessory (hoist, block and tackle, etc.). The lifting accessory must be attached to the transport lugs at the motor flange. Slide the lifting loops under the adapter plate, if necessary (Fig. 6).

WARNING

Damaged transport lugs can break off and cause considerable personal injury.

- Check the transport lugs before use for damage and secure fixation.

NOTICE

To improve the weight distribution, the transport lugs can be swivelled/rotated according to the lifting direction.
To do so, loosen and then re-tighten the fastening screws!



DANGER

Danger of death from falling parts!

The pump itself and pump parts can have a very high net weight. Falling parts pose a risk of cuts, crush injuries, bruises or impacts, which can be fatal.

- Always use suitable lifting accessories and secure parts against falling.
- Never stand below a suspended load.
- During storage and transport, as well as before all installation and assembly work, ensure that the pump is in a safe position and standing securely.



WARNING

Personal injury due to unsecured installation of the pump!

The base with the threaded holes is used for fixation only. When standing freely, the pump might not be sufficiently stable.

- Never place the pump unsecured on the pump support feet.

CAUTION

Improper lifting of the pump by the electronic module can cause damage to the pump.

- Never lift the pump by the electronic module.

6 Installation

6.1 Personnel qualifications

- Installation/dismantling: The technician must be trained in the use of the necessary tools and fixation materials.

6.2 Operator responsibilities

- Observe national and regional regulations!
- Observe locally applicable accident prevention and safety regulations of professional and trade associations.
- Provide protective equipment and ensure that the protective equipment is worn by personnel.
- Observe all regulations for working with heavy loads.

6.3 Safety



DANGER

When dismantled, the permanent magnet rotor inside the pump can pose mortal danger for people with medical implants (e.g. pacemakers).

- Follow the general behavioural guidelines that apply to handling electrical devices!
- Do not open the motor!
- Dismantling and installation of the rotor may only be carried out by Wilo customer service! If you have been fitted with a pacemaker, you must **not** carry out this kind of work!



DANGER

Risk of fatal injury due to lack of protective devices!

Due to missing protective devices of the electronic module or in the range of the coupling/motor, electric shock or contact with rotating parts can lead to life-threatening injuries.

- Before commissioning, safety devices such as such as electronic module covers or coupling covers that were removed must be reinstalled!



DANGER

Potentially fatal injury due to electronic module not being installed!

A life-threatening voltage may be present at the motor contacts! Normal operation of the pump is only permitted with the electronic module installed.

- Never connect or operate the pump without the electronic module mounted!



DANGER

Danger of death from falling parts!

The pump itself and pump parts can have a very high net weight. Falling parts pose a risk of cuts, crush injuries, bruises or impacts, which can be fatal.

- Always use suitable lifting accessories and secure parts against falling.
- Never stand below a suspended load.
- During storage and transport, as well as before all installation and assembly work, ensure that the pump is in a safe position and standing securely.



WARNING

Personal injury due to strong magnetic forces!

Opening the motor leads to high, abruptly occurring magnetic forces. This can lead to serious cuts, crushing injuries and bruises.

- Do not open the motor!



WARNING

Hot surface!

The entire pump can become very hot. There is a risk of burns!

- Allow the pump to cool down before commencing any work!



WARNING

Risk of scalding!

At high fluid temperatures and system pressures, allow the pump to cool down first and then depressurise the system.

CAUTION

Damage to the pump due to overheating!

The pump must not be allowed to run dry for more than 1 minute. Dry running causes a build-up of energy in the pump, which can damage the shaft, impeller, and mechanical seal.

- Make sure that the volume flow does not fall below the minimum value Q_{min}.

Approximate calculation of Q_{min}:

$Q_{min} = 10\ \% \times Q_{max\ pump} \times$ actual speed / max. speed

6.4 Permitted installation positions and change of the arrangement of components before the installation

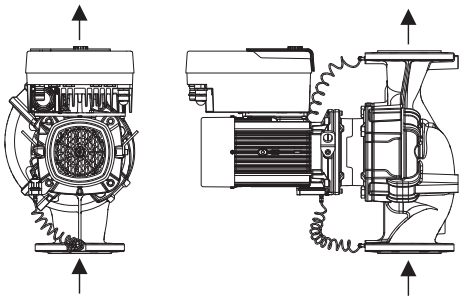

Fig. 7: Arrangement of the components upon delivery

The component arrangement concerning the pump housing is pre-assembled as a factory setting (see Fig. 7) and can be changed at the operating location if required. This may be necessary, for example, in the following cases:

- Ensuring pump venting
- Enabling better operation
- Avoid impermissible installation positions (motor and/or electronic module point downwards).

In most cases, it is enough to rotate the motor impeller unit relative to the pump housing. The possible arrangement of components is the result of the permitted installation positions.

6.4.1 Permitted installation positions with horizontal motor shaft

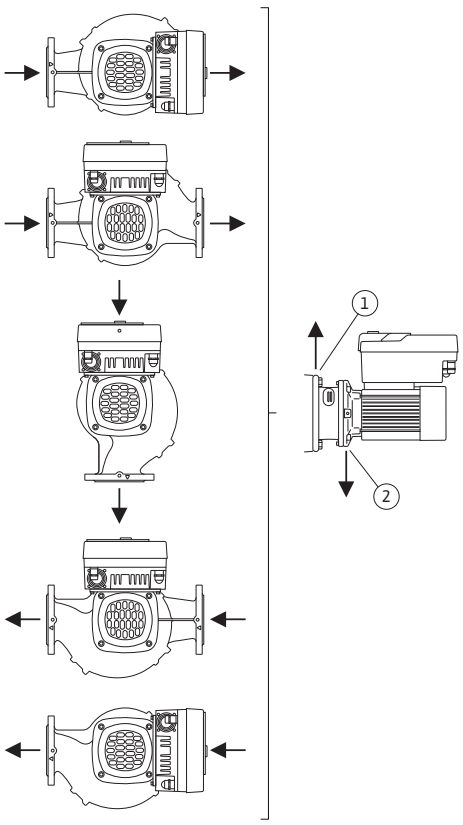

Fig. 8: Permitted installation positions with horizontal motor shaft

The permitted installation positions with horizontal motor shaft and electronic module facing up (0°) are shown in Fig. 8.

Any installation position is allowed except for “electronic module facing down” (-180°).

Venting of the pump is best ensured when the air vent valve is pointing upwards (Fig. 8, Item 1).
In this position (0°), condensate can be directed away via existing drilled holes, pump lantern and motor (Fig. 8, Item 2).

6.4.2 Permitted installation positions with vertical motor shaft

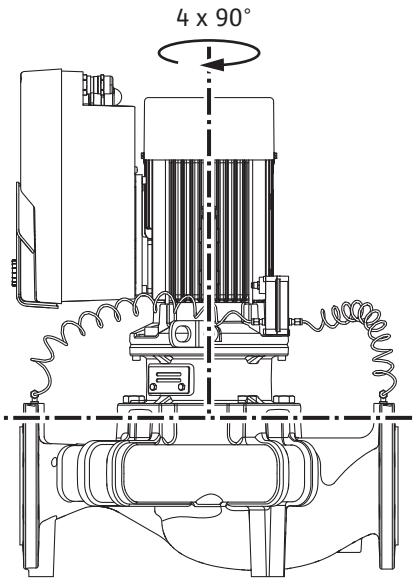

Fig. 9: Permitted installation positions with vertical motor shaft

The permitted installation positions with vertical motor shaft are shown in Fig. 9.

All installation positions except for “motor facing down” are allowed.

The motor impeller unit can be arranged in four different positions relative to the pump housing (each offset by 90°).

With twin-head pumps, it is not possible to turn both insertion sets in the direction of each other to the shaft axes due to the dimensions of the electronic modules.

6.4.3 Turn of motor impeller unit

The motor impeller unit consists of an impeller, lantern and motor with electronic module.

Turn of motor impeller unit relative to pump housing

NOTICE

To make the installation work easier, it can be helpful to install the pump in the piping. Do not connect the pump electrically or fill the pump or system.

1. Leave two transport lugs (Fig. I, Item 30) on the motor flange.
2. Attach motor impeller unit (Fig. 4) to the transport lugs with suitable lifting equipment for protection. To prevent the unit from tipping, place a belt loop around the motor and adapter of the electronic module as shown in Fig. 6. When attaching, avoid damaging the electronic module.
3. Loosen and remove the screws (Fig. I/II/III/IV, Item 29).

NOTICE

To unscrew the screws (Fig. I/II/III,/IV Item 29), use an open-end spanner, angle spanner or socket wrench with ball head, depending on the type.

We recommend that you use two mounting bolts instead of two screws (Fig. I/II/III/IV, Item 29). The installation bolts are screwed diagonally to each other through the drilled hole in the lantern (Fig. I, Item 36) into the pump housing (Fig. I, Item 24).

The installation bolts make it easier to avoid damaging the impeller when dismantling the motor impeller unit and then reinstalling it.

WARNING

Risk of injury!

Installation bolts alone do not provide sufficient protection against injury.

- Never use without lifting accessories!

4. Loosen the screw (Fig. I and Fig. III, Item 10) or (Fig. II and Fig. IV, Item 29) to remove the holder for the differential pressure sensor (Fig. I, Item 13) from the motor flange. Suspend the differential pressure sensor (Fig. I, Item 8) with the holder (Fig. I, Item 13) from the pressure sensing lines (Fig. I, Item 7). Disconnect the connection cable of the differential pressure sensor in the electronic module, if necessary, or loosen the union nut of the cable connection on the differential pressure sensor and remove the plug.

CAUTION

Material damage due to bent or kinked pressure sensing lines.

Improper handling can damage the pressure sensing line.

When turning the motor impeller unit, do not bend or kink pressure sensing lines.

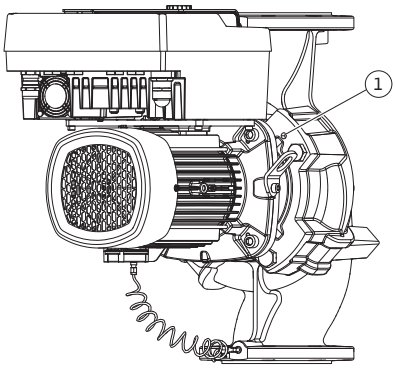

Fig. 10: Pressing off the motor impeller unit via threaded holes

5. Press the motor impeller unit (see Fig. 4) off the pump housing. Depending on the pump type (see Fig. I ... Fig. IV), there are two different approaches.
For the pump type (Fig. III and Fig. IV), loosen the screws (Item 29). Use the two adjacent threaded holes (Fig. 10, Item 1) and use suitable screws provided on-site (e.g. M10 x 25 mm).
For the pump type (Fig. I and Fig. II), use the two threaded holes M10 (Fig. 104). Use suitable screws provided on-site (e.g. M10 x 20 mm). The slots (Fig. 104, Item 2) can also be used for pressing off.

NOTICE

For the following steps, observe the screw tightening torque specified for the respective thread type! See “Screws and tightening torques [▶ 29]” table.

6. If the O-ring has been removed, moisten the O-ring (Fig. I, Item 19) and insert it into the lantern groove.

NOTICE

Always make sure that the O-ring (Fig. I, Item 19) is not twisted or squeezed during installation.

7. Insert the motor impeller unit (Fig. 4) into the pump housing in the desired position.
8. Screw in the screws (Fig. I/II/III/IV, Item 29) evenly crosswise, but do not tighten them yet.

CAUTION

Damage due to incorrect handling!

Not screwing the screws in properly can lead to sluggishness of the shaft.

After tightening the screws (Fig. I/II/III/IV, Item 29), check the rotatability of the shaft with an Allen key on the fan wheel of the motor. If necessary, loosen the screws again and tighten them evenly crosswise.

9. Clamp the holder (Fig. I, Item 13) of the differential pressure sensor under one of the screw heads (Fig. I and Fig. III, Item 10; Fig. II and Fig. IV, Item 29) on the side opposite the electronic module. Find optimum between laying the capillary tubes and DPS cable. Then tighten the screws (Fig. I and Fig. III, Item 10; Fig. II and Fig. IV, Item 29).
10. Reconnect the connection cable of the differential pressure sensor (Fig. I, Item 8) or restore the plugged connection on the differential pressure sensor.

When reinstalling the differential pressure sensor, bend the pressure sensing lines as little as possible and evenly into a suitable position. When doing this, do not deform the areas at the clamp boltings.

To facilitate the optimal positioning of the pressure sensing lines, the differential pressure sensor can be separated from the holder (Fig. I, Item 13), rotated by 180° around the longitudinal axis and reinstalled.

NOTICE

If the differential pressure sensor is turned, do not interchange the discharge and suction sides on the differential pressure sensor!

For additional information about the differential pressure sensor, see “Electrical connection” [▶ 35] section.

6.4.4 Turn of the drive

DANGER

Risk of fatal electrical shock!

Immediate risk of fatal injury if live components are touched.

- Before commencing work, switch off the power supply and secure it from being switched on again.

The drive consists of a motor and an electronic module.

Turn of the drive relative to pump housing

The lantern position is maintained, the air vent valve points upwards.

NOTICE

For the following steps, observe the screw tightening torque specified for the respective thread type! See “Screws and tightening torques [▶ 29]” table.

✓ Steps 1. and 2. are the same for all pumps according to Fig. I … Fig. III.

1. Leave two transport lugs (Fig. I, Item 30) on the motor flange.
2. Attach drive to the transport lugs with suitable lifting equipment for protection.
   To prevent the unit from tipping, place a belt loop around the motor (Fig. 6).
   Avoid damage to the electronic module during attachment.

NOTICE

To unscrew the screws (Fig. I and Fig. III, Item 10), use an open-end spanner, angle spanner or socket wrench with ball head, depending on the type.

We recommend that you use two installation bolts instead of two screws (Fig. I and Fig. III, Item 10). The installation bolts are screwed diagonally to each other through the pump housing (Fig. I, Item 24).

The installation bolts make it easier to avoid damaging the impeller when dismantling the motor impeller unit and then reinstalling it.

WARNING

Risk of injury!

Installation bolts alone do not provide sufficient protection against injury.

- Never use without lifting accessories!

⇒ **Further steps for pumps according to Fig. I**

3. Loosen and remove the screws (Fig. I, Item 10).
4. Loosen the screw (Item 10) to remove the holder for the differential pressure sensor (Item 13) from the motor flange.
   Suspend the differential pressure sensor (Item 8) with holder (Item 13) from the pres-

sure measuring lines (Item 7).
Disconnect the connection cable of the differential pressure sensor in the electronic module, if necessary.

5. Turn the drive to the desired position.
6. Screw in the screws (Item 10) again.
7. Reassemble the holder of the differential pressure sensor. Tighten the screws (Item 10) firmly. Observe torques. Reconnect the connection cable of the differential pressure sensor in the electronic module, if necessary.
8. Attach the differential pressure sensor to one of the screws on the holder (Item 13). Slide the holder under the head of one of the screws (Item 29). Finally, tighten the screw (Item 29).
9. Reconnect the connection cable of the differential pressure sensor.
   If the electronic module has been disconnected, reconnect all cables.

   ⇒ **Further steps for pumps according to Fig. II and Fig. III:**
10. Loosen and remove the screws (Fig. II, Item 29 and Fig. III, Item 10).
11. Remove the holder for the differential pressure sensor (Fig. I, Item 13) from the motor flange.
    Suspend the differential pressure sensor (Fig. I, Item 8) with holder (Fig. I, Item 13) from the pressure sensing lines (Fig. I, Item 7).
    Disconnect the connection cable of the differential pressure sensor in the electronic module, if necessary.
12. Remove the motor impeller unit (Fig. 4) from the pump housing. Use the two threaded holes M10 (see Fig. 104) and use suitable screws provided on-site (e.g. M10 x 20 mm). The slots (see Fig. 104, Item 2) can also be used for pressing off.
13. Loosen the connected cable of the differential pressure sensor.
    If the electronic module is electrically connected, loosen all connected cables or detach the electronic module from the adapter plate and secure it.
14. Securely place the motor impeller unit on a suitable workstation.
15. **Fig. II:** Loosen screws Item 10**b**.
    Fig. III: Loosen screws Item 10**a**.
16. Turn the lantern to the desired position.



NOTICE

The screws Fig. II, Item 10**b** and Fig. III, Item 10**a** are factory-fitted auxiliary screws that are no longer needed. They can be fitted again or dispensed with.

17. Attach motor impeller unit (Fig. 4) to the transport lugs with suitable lifting equipment for protection.
    To prevent the unit from tipping, place a belt loop around the motor (Fig. 6). When attaching, avoid damaging the electronic module.
18. Insert the motor impeller unit into the pump housing. Observe the permitted installation positions of the components when doing this.
    The use of mounting bolts is recommended (see section “Accessories” [▶ 20]).
    If the motor impeller unit has been secured with at least one screw (Item 29), the fixation material can be removed from the transport lugs.
19. Screw in the screws (Item 29) but do not tighten them all the way.
20. Secure the differential pressure sensor to one of the screws on the holder (Fig. I, Item 13). Slide the holder under the head of one of the screws (Item 29). Finally, tighten the screw (Item 29).
21. Reconnect the cable of the differential pressure sensor.
    If the electronic module has been disconnected, reconnect all cables.
    If the electronic module has been removed from the adapter plate, re-mount the electronic module.

Tightening torques

Component	Fig./Item	Thread	Tightening torque [Nm] ±10 % (unless otherwise stated)	Installation information
Transport lugs	Fig. I, Item 30	M8	20	
Motor impeller unit for pump housing for DN 32 ... DN 100	Fig. I and Fig. II, Item 29	M12	70	Tighten evenly and diagonally.
Motor impeller unit for pump housing for DN 100 ... DN 125	Fig. III and Fig. IV, Item. 29	M16	100	Tighten evenly and diagonally.
Lantern	Fig. I, Item 18	M5 M6 M12	4 7 70	If varied: Small screws first
Plastic impeller (DN 32 ... DN 100)	Fig. I, Item 21	Special nut	20	Grease both threads with Molykote® P37. Hold the shaft with an 18 or 22 mm open-end wrench.
Cast iron impeller (DN 100 ... DN 125)	Fig. III and Fig. IV, Item. 21	M12	60	Grease both threads with Molykote® P37. Hold the shaft with a 27 mm open-end wrench.
Protective plate	Fig. I, Item 27	M5	3.5	Disc between protective plate and lantern
Differential pressure sensor	Fig. I, Item 8	Special screw	2	
Capillary tube screw connection to the pump housing 90°	Fig. I, Item 5	R ⅛ brass	Hand-tight, suitably aligned	Installation with WEICONLOCK AN 305-11
Capillary tube screw connection to the pump housing 0°	Fig. I, Item 5	R ⅛ brass	Hand-tight	Installation with WEICONLOCK AN 305-11
Capillary tube fitting, union nut 90° DN 100 ... DN 125	Fig. I, Item 6	M8x1 brass, nickel-plated	10	Only nickel-plated nut (CV)
Capillary tube fitting, union nut 0° DN 100 ... DN 125	Fig. I, Item 6	M6x0.75 brass, nickel-plated	4	Only nickel-plated nut (CV)
Capillary tube fitting, union nut on differential pressure sensor	Fig. I, Item 9	M6x0.75 brass bright	2.4	Only bright brass nuts
Motor adapter for electronic module	Fig. I, Item 11	M6	9	

Table 6: Screws and tightening torques

The following tools are required: Allen key, hexagon wrench, wrench, screwdriver

6.5 Preparing the installation



DANGER

Danger of death from falling parts!

The pump itself and pump parts can have a very high net weight. Falling parts pose a risk of cuts, crush injuries, bruises or impacts, which can be fatal.

- Always use suitable lifting accessories and secure parts against falling.
- Never stand below a suspended load.
- During storage and transport, as well as before all installation and assembly work, ensure that the pump is in a safe position and standing securely.



WARNING

Risk of personal injury and property damage due to improper handling!

- Never set up the pump unit on unfortified surfaces or surfaces that cannot bear loads.
- Flush the pipe system if required. Dirt can cause the pump to fail.
- Install only after completion of all welding and soldering work and after the pipe system has been flushed, if required.
- Observe the minimum axial distance of 400 mm between a wall and the fan cover of the motor.
- Ensure free air access to the heat sink of the electronic module.

- The pumps must be protected from the weather and installed in a frost/dust-free, well-ventilated environment that is not potentially explosive. Observe the specifications in the section “Intended use”!
- Mount the pump in a readily accessible place. This makes it easier to complete inspections, maintenance (e.g. mechanical seal change) or replacement in the future.
- Install a device for attaching hoisting gear above the set-up site of large pumps. Total weight of the pump: see catalogue or data sheet.



WARNING

Personal injury and property damage due to improper handling!

Transport lugs mounted on the motor housing can tear out if the load is too heavy. This can lead to serious injuries and damage to the product!

- Never transport the entire pump with the transport lugs attached to the motor housing.
- Never use the transport lugs attached to the motor housing to separate or pull out the motor impeller unit.

- Only lift the pump with approved lifting gear (e.g. block and tackle, crane). See also “Transport and storage” [▶ 20] section.
- Transport lugs mounted on the motor housing are only permitted for transporting the motor!



NOTICE

Simplify subsequent work on the unit!

- To ensure the entire unit does not have to be emptied, install shut-off valves upstream and downstream of the pump.

CAUTION

Material damage due to turbine and generator operation!

Flowing through the pump in the direction of flow or against the direction of flow can cause irreparable damage to the drive.

Install a swing check valve on the discharge side of each pump!

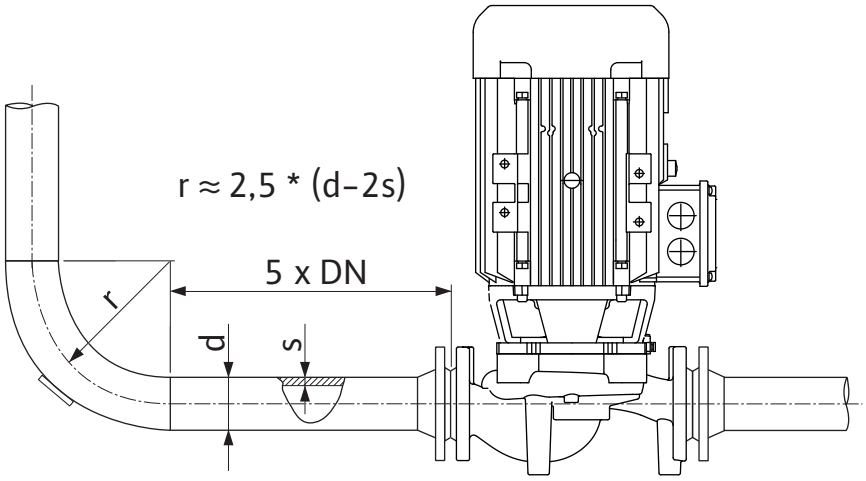

Fig. 11: Settling section upstream and downstream of the pump

NOTICE

Avoid flow cavitation!

- A settling section must be provided upstream and downstream of the pump in the form of a straight pipe. The length of the settling section must be at least 5 times the nominal diameter of the pump flange.

- The pipes and pump must be free of mechanical stress when installed.
- The pipes must be fixed in such a way that the pump does not have to support the weight of the pipes.
- Clean and flush the unit before connecting the pipes.
- The direction of flow must correspond with the direction arrow on the pump flange.
- Venting of the pump is best ensured when the air vent valve is pointing upwards (Fig. 8). If the motor shaft is vertical, any orientation is permitted. See also “Permissible installation positions” [▶ 24] section.
- Leakages on the clamping ring screw connection (Fig. I, Item 5/6) can be caused by transportation (e.g. setting behaviour) and handling of the pump (turning the drive, attaching insulation). Further turning the clamping ring screw connection by a 1/4 turn resolves the leakage.
  If the leakage persists after this 1/4 turn, do not turn any further, but replace the screwed connection.

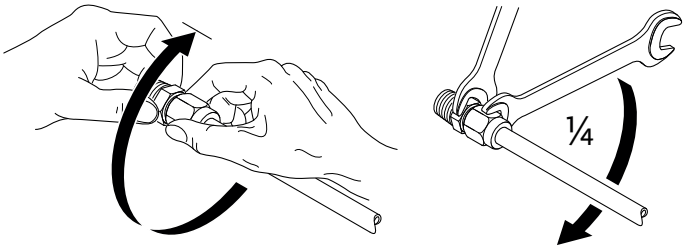

Fig. 12: Further turning the clamping ring screw connection by a 1/4 turn

6.5.1 Permissible forces and torques on the pump flanges

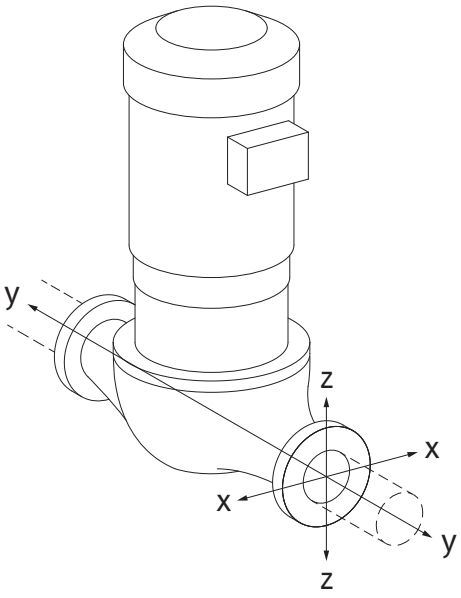

Fig. 13: Load case 16A, EN ISO 5199, Appendix B

Pump suspended in pipe, case 16A (Fig. 13)

DN	Forces F [N]				Torques M [Nm]			
	F_X	F_Y	F_Z	Σ Forces F	M_X	M_Y	M_Z	Σ Torques M
Discharge and suction flange								
32	450	525	425	825	550	375	425	800
40	550	625	500	975	650	450	525	950
50	750	825	675	1300	700	500	575	1025
65	925	1050	850	1650	750	550	600	1100
80	1125	1250	1025	1975	800	575	650	1175
100	1500	1675	1350	2625	875	625	725	1300
125	1775	1975	1600	3100	1050	750	950	1525
Values in acc. with ISO/DIN 5199 – class II (2002) – Appendix B								

Table 7: Permissible forces and torques on pump flanges in vertical pipe

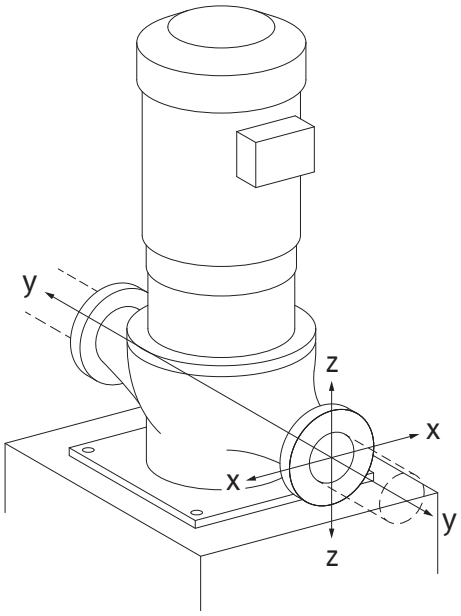

Fig. 14: Load case 17A, EN ISO 5199, Appendix B

Vertical pump on pump feet, case 17A (Fig. 14)

DN	Forces F [N]				Torques M [Nm]			
	F_X	F_Y	F_Z	Σ Forces F	M_X	M_Y	M_Z	Σ Torques M
Discharge and suction flange								
32	338	394	319	619	300	125	175	550
40	413	469	375	731	400	200	275	700
50	563	619	506	975	450	250	325	775
65	694	788	638	1238	500	300	350	850
80	844	938	769	1481	550	325	400	925
100	1125	1256	1013	1969	625	375	475	1050
125	1775	1481	1200	2325	800	500	700	1275
Values in acc. with ISO/DIN 5199 – class II (2002) – Appendix B								

Table 8: Permissible forces and torques on pump flanges in horizontal pipe

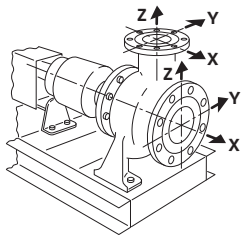

Fig. 15: Load case 1A

Horizontal pump, axial connector x-axis, case 1A

DN	Forces F [N]				Torques M [Nm]			
	F_X	F_Y	F_Z	Σ Forces F	M_X	M_Y	M_Z	Σ Torques M
Suction flange								
50	578	525	473	910	490	350	403	718
65	735	648	595	1155	525	385	420	770
80	875	788	718	1383	560	403	455	823
100	1173	1050	945	1838	613	438	508	910
Values in acc. with ISO/DIN 5199 – class II (2002) – Appendix B								

Table 9: Permissible forces and torques on pump flanges

Horizontal pump, top connector z-axis, case 1A

DN	Forces F [N]				Torques M [Nm]			
	F_X	F_Y	F_Z	Σ Forces F	M_X	M_Y	M_Z	Σ Torques M
Discharge flange								
32	315	298	368	578	385	263	298	560
40	385	350	438	683	455	315	368	665
50	525	473	578	910	490	350	403	718
65	648	595	735	1155	525	385	420	770
80	788	718	875	1383	560	403	455	823

Values in acc. with ISO/DIN 5199 – class II (2002) – Appendix B

Table 10: Permissible forces and torques on pump flanges

If not all working loads reach the maximum permitted values, one of these loads may exceed the normal limit value. Provided that the following additional conditions are fulfilled:

- All force and torque components are limited to 1.4 times the maximum permitted value.
- The forces and torques acting on each flange meet the requirements of the compensation equation.

$$\left(\frac{\sum|F|_{\text{effective}}}{\sum|F|_{\text{max. permitted}}}\right)^2 + \left(\frac{\sum|M|_{\text{effective}}}{\sum|M|_{\text{max. permitted}}}\right)^2 \leq 2$$

Fig. 16: Compensation equation

$\Sigma F_{effective}$ and $\Sigma M_{effective}$ are the arithmetic sums of the effective values of both pump flanges (inlet and outlet). $\Sigma F_{max.\ permitted}$ and $\Sigma M_{max.\ permitted}$ are the arithmetic sums of the maximum permitted values of both pump flanges (inlet and outlet). The algebraic signs of Σ F and Σ M are not taken into consideration in the compensation equation.

Influence of material and temperature

The maximum permissible forces and torques apply for the grey cast iron base material and for an initial temperature value of 20 °C.
For higher temperatures, the values must be corrected as follows depending on the ratio of their modulus of elasticity:

$E_{t,\ EN-GJL} / E_{20,\ EN-GJL}$

$E_{t,\ EN-GJL}$ = Modulus of elasticity grey cast iron at the selected temperature

$E_{20,\ EN-GJL}$ = Modulus of elasticity grey cast iron at 20 °C

6.5.2 Condensate drainage/insulation

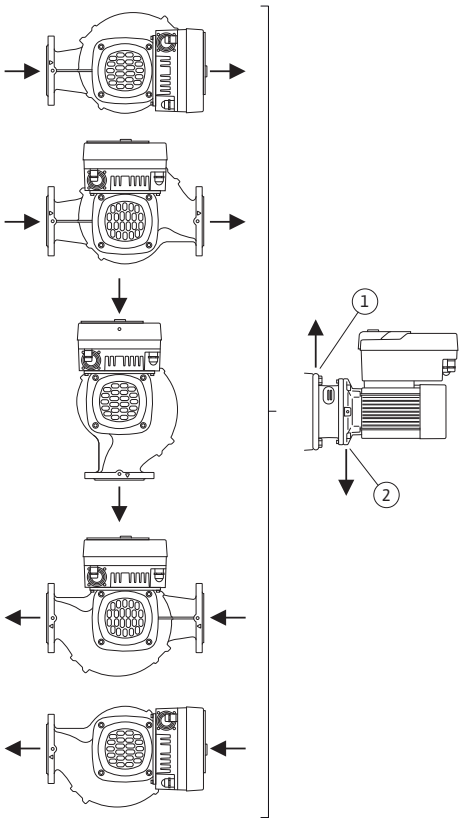

Fig. 17: Permitted installation positions with horizontal shaft

When using the pump in air conditioning or cooling systems:

- The condensate that forms in the lantern can be drained specifically via an existing drilled hole. A drain pipe can also be connected to this opening and a small amount of escaping liquid can be drained off.
- The motors are equipped with condensation water holes which are closed with a rubber plug at the factory. The rubber plug is used to guarantee that protection class IP55 is fulfilled.
- To allow condensation water to drain off, the rubber plug must be removed downwards.
- With a horizontal motor shaft, the condensate hole must be positioned towards the bottom (Fig. 17, Item 2). If necessary, the motor must be turned.

CAUTION

If the rubber plug is removed, protection class IP55 is no longer ensured!

NOTICE

When systems are insulated, only the pump housing may be insulated. Lantern, drive and differential pressure sensor are not insulated.

NOTICE

Pump housing, lanterns and attached parts (e.g. differential pressure sensor) must be protected against freezing from the outside.

In case of very strong condensation and/or ice formation, any surfaces of the lantern which are very wet with condensate can also be insulated additionally (direct insulation of individual surfaces). Ensure that the condensate drains out of the hole in the lantern.
If service is necessary, the dismantling of the lantern must not be obstructed. The air vent valve and the coupling protection must be freely accessible.

An insulation material without ammonia compounds must be used as insulation material for the pump. This prevents stress corrosion cracking on the union nuts of the differential pressure sensor. Otherwise, direct contact with the brass screw connections must be avoided. Stainless steel screwed connections are available for this as an accessory. As an alternative, corrosion protection tape (e.g. insulating tape) can also be used.

6.6 Twin-head pump installation/Y-pipe installation

A twin-head pump is a pump housing with two pump drives; two single pumps operated in one Y-piece are a two-pump system.

NOTICE

For twin-head pumps in a twin-head pump housing, the pump on the left in the direction of flow is configured as the main pump at the factory. The differential pressure sensor is mounted on this pump. The Wilo Net bus communication cable is also mounted and configured on this pump at the factory.

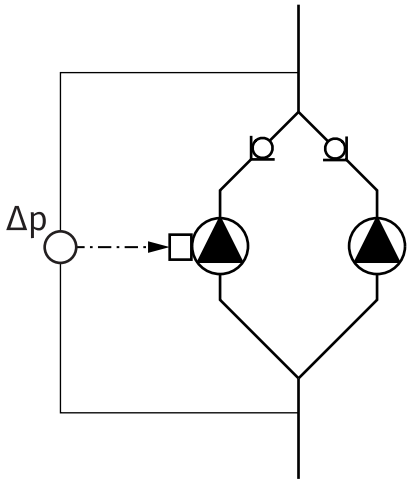

Fig. 18: Example – differential pressure sensor connection in y-pipe installation

Two single pumps as two-pump system in Y-piece:

In the example in Fig. 18, the main pump is the left-hand pump in the direction of flow. Connect the differential pressure sensor to this pump!
The two single pumps must be connected and configured to form a two-pump system. See “Operating the pump” [▶ 50] section and “Dual-pump operation” [▶ 73] section.

The measuring points of the differential pressure sensor must be on the suction and discharge side of the two-pump system in the corresponding collector pipe.

6.7 Installation and position of additional sensors to be connected

In the following cases, sensor sleeves must be installed in the pipes for the admission of temperature sensors:

- Heating/cooling quantity measurement
- Temperature control

Heating/cooling quantity measurement:

A temperature sensor must be installed in the flow and return of the hydraulic circuit, via which the pump records the two temperature values. The temperature sensors are configured in the pump menu.

NOTICE

The heat/cooling quantity measurement is not suitable for billing the amount of energy consumed. It does not meet the calibration requirements for billing-relevant energy quantity measuring instruments.

Temperature difference ΔT-c and temperature T-c

For the detection of one or two temperatures, the temperature sensors must be installed at suitable positions in the pipe. The temperature sensors are configured in the pump menu. Detailed information on the sensor positions for each pump control mode can be found in the Consulting guide. See www.wilo.com.

NOTICE

Available as accessories:
Temperature sensor Pt1000 for connection to the pump (tolerance class AA according to IEC 60751)
Sensor sleeves for installation in the piping

Index circuit evaluator – hydraulic index circuit in the system:

As delivered, a differential pressure sensor is installed on the flanges of the pump. Alternatively, a differential pressure sensor can also be installed at the hydraulically most unfavourable point in the pipe network. The cable connection is connected to one of the analogue inputs. The differential pressure sensor is configured in the pump menu. Possible signal types on differential pressure sensors:

- 0 ... 10 V
- 2 ... 10 V
- 0 ... 20 mA
- 4 ... 20 mA

7 Electrical connection



DANGER

Risk of fatal injury due to electrical current!

The use of a thermal overload protection is recommended!

Improper conduct when carrying out electrical work can lead to death due to electric shock!

- Electrical connection may only be carried out by a qualified electrician and in accordance with the applicable regulations!
- Adhere to accident prevention regulations!
- Before beginning work on the product, make sure that the pump and drive are electrically isolated.
- Make sure that no one can turn on the power supply again before work is completed.
- Make sure that all energy sources can be isolated and locked. If the pump was switched off by a safety device, it must be secured against switching back on again until the error has been remedied.
- Electrical machines must always be earthed. Earthing must be appropriate for the drive and meet the relevant standards and regulations. Earth terminals and fixation elements must be suitably dimensioned.
- Connection cables must **never** touch the piping, pump or motor housing.
- If it is possible for persons to come into contact with the pump or the pumped fluid, the earthed connection must also be fitted with a residual current circuit breaker.
- Observe the installation and operating instructions for the accessories!



DANGER

Risk of fatal injury due to contact voltage!
Even when enabled, high contact voltages can still be present in the electronic module due to undischarged capacitors. Therefore, work on the electronic module must not be started until 5 minutes have elapsed!

Touching live parts will result in serious injuries or death!

- Before working on the pump, disconnect all poles of the supply voltage and secure against being switched on again! Wait 5 minutes.
- Check whether all connections (including potential-free contacts) are voltage-free!
- Never insert objects (e.g. nail, screwdriver, wire) into openings on the electronic module!
- Reinstall removed safety devices (such as module covers)!



DANGER

Risk of fatal electrical shock! Generator or turbine operation during pump flow!

Even without the electronic module (without electrical connection), there may be dangerous contact voltage at the motor contacts!

- Check for absence of voltage and cover or cordon off adjacent live parts!
- Close the shut-off devices upstream and downstream of the pump!



DANGER

Risk of fatal electrical shock!

Water on the upper part of the electronic module can enter the electronic module when it is opened.

- Before opening, remove water, e.g. on the display, by wiping it off completely. Avoid water penetration in general!



DANGER

Potentially fatal injury due to electronic module not being installed!

A life-threatening voltage may be present at the motor contacts! Normal operation of the pump is only permitted with the electronic module installed.

- Never connect or operate the pump without the electronic module mounted!

CAUTION

Material damage due to improper electrical connection!
An inadequate mains design can lead to system failures and cable fires due to mains overload!

- When designing the mains supply with regard to the used cable cross-sections and fuses, pay special attention to the fact that, in multi-pump operation, it is possible that all pumps operate at the same time for short periods.

CAUTION

Danger of material damage caused by improper electrical connection!

- Ensure that the current type and voltage of the mains connection correspond to the specifications on the pump rating plate.

Before the pump can be electrically connected, loosen the upper part of the electronic module:

1. Loosen the screws of the electronic module (Fig. I, Item 3) and remove the upper part of the electronic module (Fig. I, Item 2).
2. Establish electrical connection according to this section.
3. Re-mount the upper part of the electronic module (Fig. I, Item 2) and tighten the four screws (Fig. I, Item 3). Observe torques.

Threaded cable glands and threaded cable glands

There are six cable bushings to the terminal room on the electronic module. The cable for the power supply of the electric fan on the electronic module is mounted at the factory. The requirements for electromagnetic compatibility must be observed.

CAUTION

In order to ensure IP55, unoccupied threaded cable glands must remain closed with the plugs provided by the manufacturer.

- When installing the threaded cable gland, make sure that a gasket is installed below the threaded cable gland.

Threaded cable glands including gaskets for the cable bushings 2 to 5 are enclosed with the product as a kit.

In order to feed more than one cable through the metal threaded cable gland (M20), two multiple inserts for cable diameters of up to 2x 6 mm are included in the kit.

1. Screw in threaded cable glands as required. Observe the tightening torque. See “Electronic module tightening torques” [▶ 46] table in the “Turning the display” [▶ 45] section.
2. Make sure that a gasket is fitted between the threaded cable gland and the cable bushing.

The combination of threaded cable gland and cable bushing must be made according to the following “Cable connections” table:

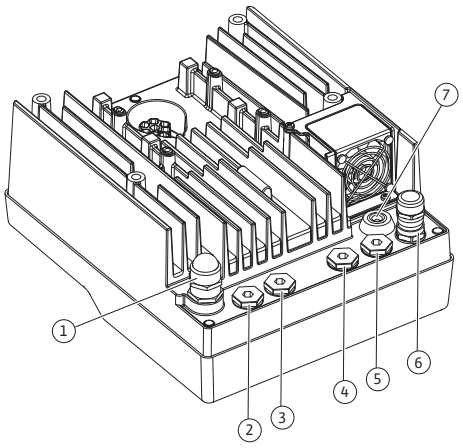

Fig. 19: Threaded cable glands/cable bushings

Connection	Threaded cable gland	Cable bushing Fig. 19, Item	Terminal no.
Electrical mains connection 3~380 V AC ... 3~440 V AC 1~220 V AC ... 1~240 V AC	Plastic	1	1 (Fig. 20)
SSM 1~220 V AC to 1~240 V AC 12 V DC	Plastic	2	2 (Fig. 20)
SBM 1~220 V AC to 1~240 V AC 12 V DC	Plastic	3	3 (Fig. 20)
Digital input EXT. OFF (24 V DC)	Metal with shielding	4, 5, 6	11 to 14 (Fig. 21) (DI1 or DI2)
Digital input EXT. MAX/EXT. MIN (24 V DC)	Metal with shielding	4, 5, 6	11 to 14 (Fig. 21) (DI1 or DI2)
Bus Wilo Net (Bus communication)	Metal with shielding	4, 5, 6	15 to 17 (Fig. 21)
Analogue input 1 0 ... 10 V, 2 ... 10 V, 0 ... 20 mA, 4 ... 20 mA	Metal with shielding	4, 5, 6	1, 2, 3 (Fig. 21)
Analogue input 2 0 ... 10 V, 2 ... 10 V, 0 ... 20 mA, 4 ... 20 mA	Metal with shielding	4, 5, 6	4, 5 (Fig. 21)
Analogue input 3 PT1000 0 ... 10 V, 2 ... 10 V, 0 ... 20 mA, 4 ... 20 mA	Metal with shielding	4, 5, 6	6, 7, 8 (Fig. 21)
Analogue input 4 PT1000 0 ... 10 V, 2 ... 10 V, 0 ... 20 mA, 4 ... 20 mA	Metal with shielding	4, 5, 6	9, 10 (Fig. 21)
CIF module (Bus communication)	Metal with shielding	4, 5, 6	4 (Fig. 25)

Connection	Threaded cable gland	Cable bushing Fig. 19, Item	Terminal no.
Electrical connection of the fan assembled at the factory (24 V DC)		7	4 (Fig. 20)

Table 11: Cable connections

Cable requirements

Terminals are intended for rigid and flexible conductors with or without ferrules.
If flexible cables are used, the use of ferrules is recommended.

Connection	Terminal cross-section in mm² Min.	Terminal cross-section in mm² Max.	Cable
Electrical mains connection 3~	≤ 4 kW: 4x1.5 5.5 ... 7.5 kW: 4x4	≤ 4 kW: 4x4 5.5 ... 7.5 kW: 4x6	
Electrical mains connection 1~	≤ 1.5 kW: 3x1.5	≤ 1.5 kW: 3x4	
SSM	2x0.2	3x1.5 (1.0**) changeover relay	*
SBM	2x0.2	3x1.5 (1.0**) changeover relay	*
Digital input EXT. OFF	2x0.2	2x1.5 (1.0**)	*
Digital input EXT. MIN/ EXT. MAX	2x0.2	2x1.5 (1.0**)	*
Analogue input 1	2x0.2	2x1.5 (1.0**)	*
Analogue input 2	2x0.2	2x1.5 (1.0**)	*
Analogue input 3	2x0.2	2x1.5 (1.0**)	*
Analogue input 4	2x0.2	2x1.5 (1.0**)	*
Wilo Net	3x0.2	3x1.5 (1.0**)	Shielded
CIF module	3x0.2	3x1.5 (1.0**)	Shielded

Table 12: Cable requirements

*Cable length ≥ 2 m: use shielded cables.

**When using ferrules, the maximum cross-section at the terminals of the communication interfaces is reduced to 0.25 to 1 mm².

In order to comply with electromagnetic compatibility standards, the following cables must always be shielded:

- Cable for EXT. OFF/ MIN/ MAX at digital inputs
- Temperature sensors at analogue inputs
- External control cable sensors at analogue inputs
- Differential pressure sensor (DPS) at analogue inputs, if installed on-site
- Two-pump cable with two single pumps in the Y-piece (bus communication via Wilo Net)
- Cable for connecting pumps for the control mode Multi-Flow Adaptation and for connecting to the Wilo-Smart Gateway (bus communication via Wilo Net)
- CIF module to the building automation (bus communication)

The shield is connected to the cable bushing on the electronic module. See Fig. 25.

Terminal connections

Terminal connections for all cable connections in the electronic module correspond to push-in technology. They can be opened with a screwdriver type slot SFZ 1 – 0.6 x 0.6 mm. Exception: Wilo-Smart Connect module BT.

Length of cable to strip

The stripping length of the cables for the terminal connection is 8.5 mm to 9.5 mm.

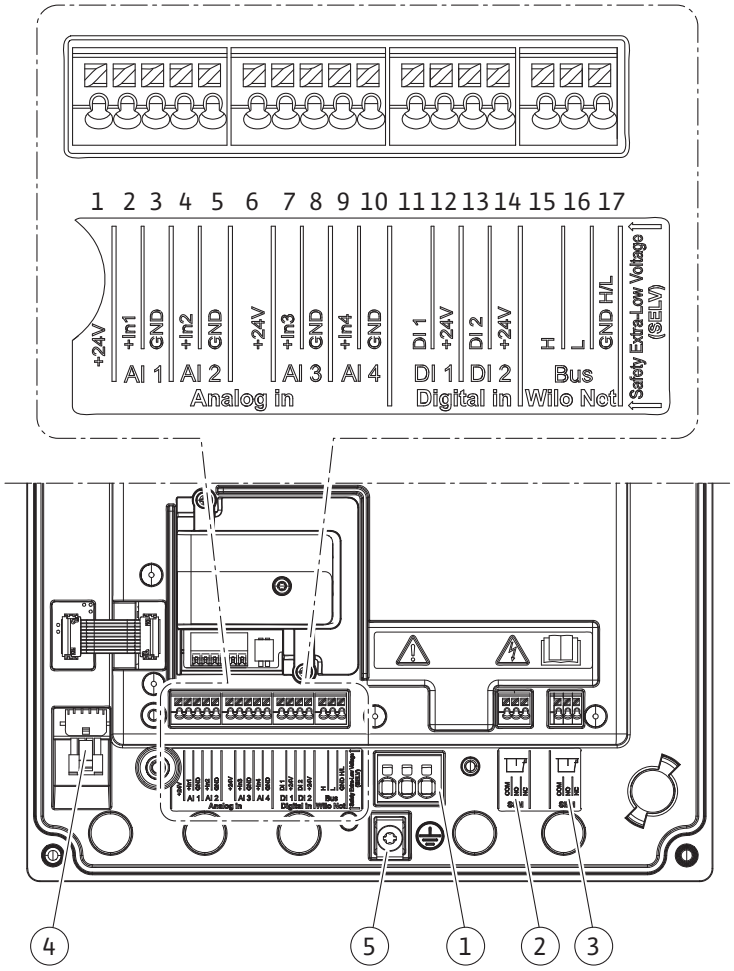

Fig. 20: Overview of terminals in the module

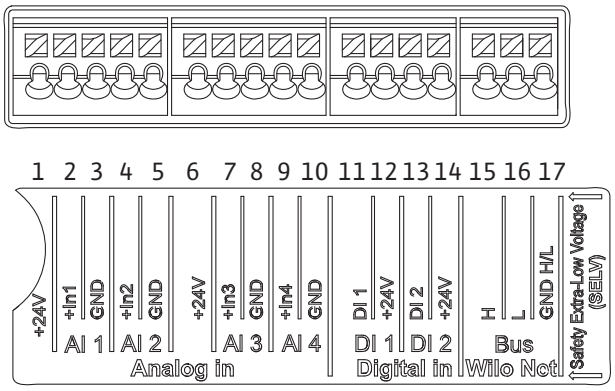

Fig. 21: Terminals for analogue inputs, digital inputs and Wilo Net

Terminal assignment

Name	Assignment	Notice
Analogue IN (AI1) (Fig. 20)	+ 24 V (terminal: 1) + In 1 → (terminal: 2) – GND (terminal: 3)	Type of signal: • 0 to 10 V • 2 to 10 V
Analogue IN (AI2) (Fig. 20)	+ In 2 → (terminal: 4) – GND (terminal: 5)	• 0 to 20 mA • 4 to 20 mA Electric strength: 30 V DC / 24 V AC Power supply: 24 V DC: at maximum 50 mA

Name	Assignment	Notice
Analogue IN (AI3) (Fig. 20)	+ 24 V (terminal: 6) + In 3 → (terminal: 7) – GND (terminal: 8)	Type of signal: • 0 to 10 V • 2 to 10 V • 0 to 20 mA • 4 to 20 mA • PT1000 Electric strength: 30 V DC / 24 V AC Power supply: 24 V DC: at maximum 50 mA
Analogue IN (AI4) (Fig. 20)	+ In 4 → (terminal: 9) – GND (terminal: 10)	
Digital IN (DI1) (Fig. 20)	DI1 → (terminal: 11) + 24 V (terminal: 12)	Digital inputs for potential-free contacts: • Maximum voltage: < 30 V DC / 24 V AC • Maximum loop current: < 5 mA • Operating voltage: 24 V DC • Operating loop current: 2 mA per input
Digital IN (DI2) (Fig. 20)	DI2 → (terminal: 13) + 24 V (terminal: 14)	
Wilo Net (Fig. 20)	↔ H (terminal: 15) ↔ L (terminal: 16) GND H/L (terminal: 17)	
SSM (Fig. 23)	COM (terminal: 18) ← NO (terminal: 19) ← NC (terminal: 20)	Potential-free changeover contact Contact load: • Permitted minimum: SELV 12 V AC / DC, 10 mA • Permitted maximum: 250 V AC, 1 A, 30 V DC, 1 A
SBM (Fig. 23)	COM (terminal: 21) ← NO (terminal: 22) ← NC (terminal: 23)	Potential-free changeover contact Contact load: • Permitted minimum: SELV 12 V AC / DC, 10 mA • Permitted maximum: 250 V AC, 1 A, 30 V DC, 1 A
Mains connection		

Table 13: Terminal assignment

7.1 Mains connection

NOTICE

Nationally applicable guidelines, standards and regulations as well as the requirements of local energy supply companies must be observed!

NOTICE

Tightening torques for the terminal screws, see “Tightening torques” [▶ 29] table. Only use a calibrated torque wrench!

1. Observe the current type and voltage on the rating plate.
2. Establish the electrical connection via a fixed connection cable equipped with a connector device or an all-pole switch with a contact opening width of at least 3 mm.
3. To protect against leakage and for strain relief to the threaded cable gland, use a connection cable with sufficient outer diameter.

4. Guide the connection cable through the M25 threaded cable gland (Fig. 19, Item 1). Threaded cable gland with the specified torques.
5. The cables near the screwed connection are to be bent to form a drain loop, to drain any accumulated drips.
6. Lay the connection cable in such a way that it touches neither the pipes nor the pump.
7. Use a heat-resistant connection cable if fluid temperatures exceed 90 °C.

NOTICE

If flexible cables are used for the mains connection or communication connection, use wire end ferrules!

Unoccupied threaded cable glands must remain closed with the plugs provided by the manufacturer.

NOTICE

In regular operation, it's better to switch the pump on or off instead of switching the mains voltage. This is done via the digital input EXT. OFF.

Line terminal connection

Line terminal for 3~ mains connection with earthing

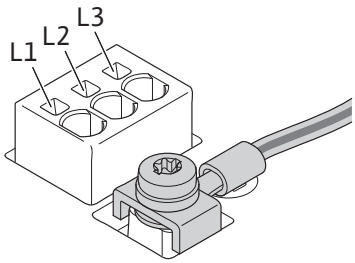

Line terminal for 1~ mains connection with earthing

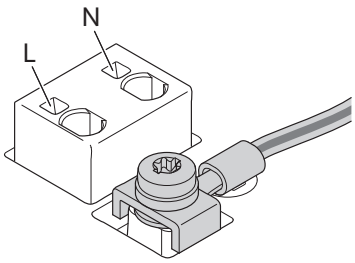

Protective ground conductor connection

When using a flexible connection cable, use a ring lug for the earth wire (Fig. 22).

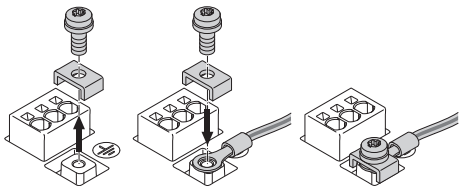

Fig. 22: Flexible connection cable

When using a rigid connection cable, connect the earth wire in a U-shape (Fig. 23).

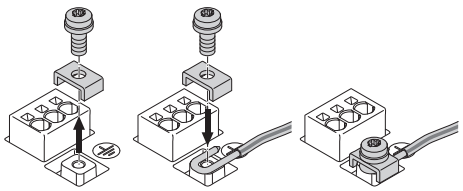

Fig. 23: Rigid connection cable

Residual-current device (RCD)

This pump is equipped with a frequency converter. Therefore, it must not be protected by a residual-current device. Frequency converters can impair the function of residual-current-operated protection circuits.

NOTICE

This product can cause direct current in the protective earthing conductor. When a residual-current device (RCD) or a residual-current monitor (RCM) is used for protection in the case of direct or indirect contact, only an RCD or RCM of type B is permissible on the power supply side of this product.

- Labelling: 
- Trigger current:> 30 mA

Fuse protection on mains side: max. 25 A (for 3~)
Mains-side fuse protection: max. 16 A (for 1~)
The mains-side fuse protection must correspond to the electrical configuration of the pump.

Circuit breaker

The use of a circuit breaker is recommended.

NOTICE

Circuit breaker trigger characteristic: B

Overload: 1.13 – 1.45 x I_{nom}

Short-circuit: 3 – 5 x I_{nom}

7.2 SSM and SBM connection

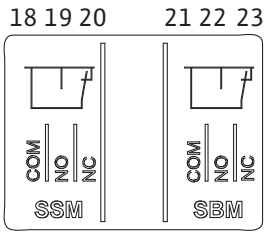

Fig. 24: Terminals for SSM and SBM

SSM (collective fault signal) and SBM (collective run signal) are connected to terminals 18 ... 20 and 21 ... 23.

The cables of the electrical connection for SBM and SSM do **not** have to be shielded.

NOTICE

A maximum of 230 V may be applied between the contacts of the relays of SSM and SBM, never 400 V!

When using 230 V as a switching signal, the same phase must be used between the two relays.

SSM and SBM are designed as changeover contacts and can each be used as a normally open contact or normally closed contact. When the pump is voltage-free, the contact is normally closed contact. The following applies to SSM:

- If a fault is present, the contact at NC is normally open contact.
- The converter bridge to NO is closed.

The following applies to SBM:

- Depending on the configuration, the contact is set to NO or NC.

7.3 Connection of digital, analogue and bus inputs

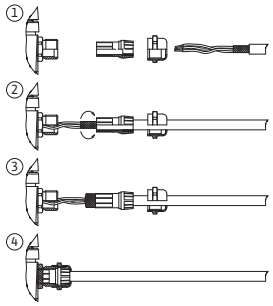

Fig. 25: Shield clamp

The cables of the digital inputs, analogue inputs and bus communication must be shielded via the metal threaded cable gland of the cable bushing (Fig. 19, Item 4, 5 and 6). See Fig. 25 for shielding.

When used for extra-low voltage cables, up to three cables can be passed through for each threaded cable gland. Use the appropriate multiple sealing inserts for this purpose.

NOTICE

2-fold sealing inserts are included in the scope of delivery. If 3-fold inserts are required, procure these inserts on-site.

NOTICE

If two cables have to be connected to one 24 V supply terminal, provide a solution on-site!

Only one cable per terminal may be connected to the pump!

NOTICE

The terminals of the analogue inputs, digital inputs and Wilo Net meet the “safe isolation” requirement (according to EN 61800-5-1) to the mains terminals, the terminals SBM and SSM (and vice versa).

NOTICE

The control is designed as a SELV (Safe Extra Low Voltage) circuit. In this way, the (internal) supply fulfils the requirements for safe separation of the supply. GND is not connected to PE.

NOTICE

The pump can be switched on and off without intervention from the operator. This can be done, for example, using the control function, by external connection to the building automation or also by the EXT. OFF function.

7.4 Differential pressure sensor connection

If pumps are delivered with a differential pressure sensor fitted, it is connected to analogue input AI 1 at the factory.

If the differential pressure sensor is connected on-site, carry out the cable assignment as follows:

Cable	Colour	Terminal	Function
1	Brown	+24 V	+24 V
2	Black	In1	Signal
3	Blue	GND	Earth

Table 14: Connection; differential pressure sensor cable

NOTICE

For a twin-head pump or Y-pipe installation, connect the differential pressure sensor to the main pump! The measuring points of the differential pressure sensor must be on the suction and discharge side of the twin-head pump system in the common collector pipe. See “Twin-head pump installation/Y-pipe installation” [▶ 34] section.

7.5 Wilo Net connection

Wilo Net is a Wilo system bus used for establishing communication between Wilo products:

- two single pumps as a twin-head pump in the Y-piece or one twin-head pump in a twin-head pump housing
- several pumps used with Multi-Flow Adaptation control mode
- Wilo-Smart Gateway and pump

For details on connection, see the detailed instructions at www.wilo.com!

NOTICE

For Stratos GIGA2.0-**D**, the Wilo Net cable for twin-head pump communication is factory-fitted to both electronic modules.

In order to establish the Wilo Net connection, the three **H, L, GND** terminals must be wired with a communication cable from pump to pump.
Incoming and outgoing cables are clamped in a terminal.

Cable for Wilo Net communication:

To ensure interference immunity in industrial environments (IEC 61000-6-2), use a shielded CAN bus cable and an EMC-compatible cable entry for the Wilo Net cables. Connect the shield to earth at both ends. For optimum transmission, the data cable pair (H and L) must be twisted at Wilo Net and have a characteristic impedance of 120 ohms. Maximum cable length 200 m.

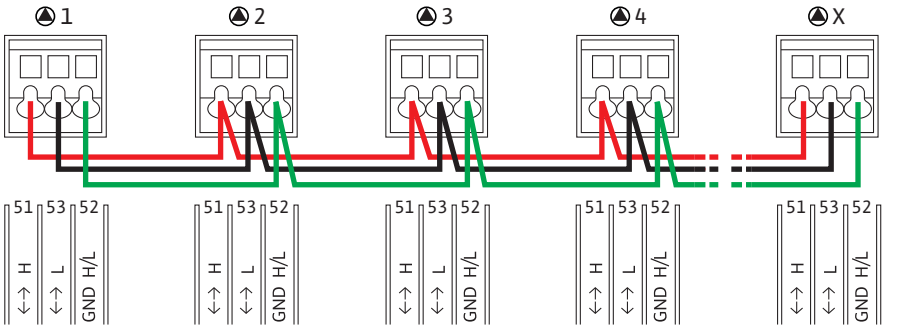

Pump	Wilo Net termination	Wilo Net address
Pump 1	switched on	1
Pump 2	switched off	2
Pump 3	switched off	3
Pump 4	switched off	4
Pump X	switched on	X

Table 15: Wilo Net cabling

Number of Wilo Net participants:

In the Wilo Net, a maximum of 21 participants can communicate with each other, each individual node counting as a participant here, i.e., a twin-head pump consists of two participants. Integration of a Wilo Smart Gateway also requires a separate node.

Example 1:
If a Multi-Flow Adaptation system is made up of twin-head pumps, this means a maximum of 5 twin-head pumps can communicate with each other via Wilo Net in the MFA network. In addition to this maximum of 5 twin-head pumps, up to 10 additional single pumps can be included in the network.

Example 2:
The primary pump of a Multi-Flow Adaptation system is a twin-head pump and the whole system should be able to be remotely monitored via a gateway.

- Primary twin-head pump = 2 participants (e.g. ID 1 and 2)
- Wilo-Smart Gateway = 1 participant (e.g. ID 21)

For further descriptions, see “Application and function of the Wilo Net interface” [▶ 92] section.

7.6 Turn of the display

CAUTION

If the graphic display is not fixed properly and the electronic module is not installed correctly, protection class IP55 is no longer ensured.

- Ensure that no gaskets are damaged!

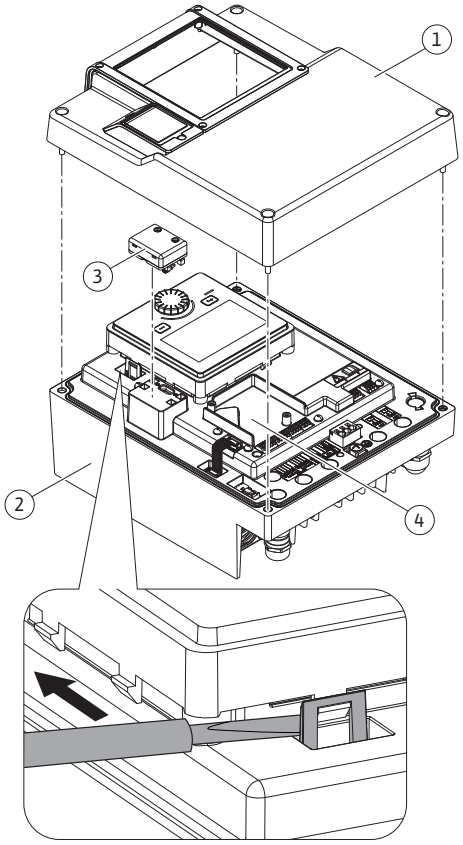

Fig. 26: Electronic module

The graphic display can be turned in 90° steps. To do this, open the upper part of the electronic module using a screwdriver.

The graphic display is fixed in position by two snap-in hooks.

1. Carefully open the snap-in hooks (Fig. 25) with a tool (e.g. screwdriver).
2. Turn the graphic display to the desired position.
3. Fix the graphic display with the snap-in hooks.
4. Fit the upper part of the module again. Observe the tightening torques on the electronic module here.

Component	Fig./Item	Drive/thread	Tightening torque [Nm] ±10 % (unless otherwise stated)	Installation information
Electronic module upper part	Fig. 26, Item 1 Fig. I, Item 2	Torx 25/M5	4.5	
Threaded cable gland union nut	Fig. 19, Item 1	External hexagon socket/M25	11	*
Threaded cable gland	Fig. 19, Item 1	External hexagon socket/M25x1.5	8	*
Threaded cable gland union nut	Fig. 19, Item 6	External hexagon socket/M20x1.5	6	*
Threaded cable gland	Fig. 19, Item 6	External hexagon socket/M20x1.5	5	
Power terminals and control terminals	Fig. 21	Pusher	–	**
Earthing screw	Fig. 20, Item 5	IP10-slot 1/M5	4.5	
CIF module	Fig. 26, Item 4	IP10/PT 30x10	0.9	
Cover of Wilo-Smart Connect module BT	Fig. 28	Internal hexagon socket/M3x10	0.6	
Module fan	Fig. 111	IP10/AP 40x12/10	1.9	

Table 16: Tightening torques for electronic module

*****Tighten when installing the cables.

******Press with screwdriver to plug and unplug the cable.

8 Installation of Wilo-Smart Connect module BT

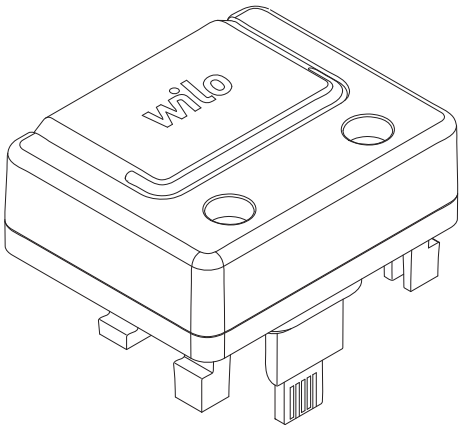

Fig. 27: Wilo-Smart Connect module BT

The Bluetooth interface Wilo-Smart Connect module BT (Fig. 26, Item 3, and Fig. 27) is used to connect to mobile end devices such as smartphones and tablets. The Wilo-Smart Connect feature is in the Wilo-Assistant app. Using the Wilo-Smart Connect feature, you can operate and adjust the pump and read out pump data. For settings, see "Commissioning" [▶ 48] section.

Technical data

- Frequency band: 2400 MHz to 2483.5 MHz
- Maximum radiated transmission power: < 10 dBm (EIRP)

Installation

DANGER

Risk of fatal electric shock!

Immediate danger of death if live components are touched!

- Check whether all connections are voltage-free!

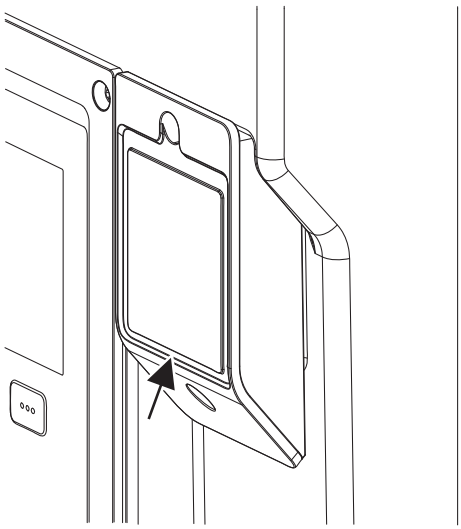

Fig. 28: Cover for Wilo-Smart Connect module BT

1. Loosen four screws of the upper part of the electronic module (Fig. 26, Item 1; Fig. I, Item 2).
2. Remove the upper part of the electronic module and put it aside.
3. Insert the Wilo-Smart Connect module BT into the designated interface Wilo-Connectivity Interface. See Fig. 26, Item 3.
4. Refit the upper part of the electronic module!

If the Wilo-Smart Connect module BT is only to be checked, the upper part of the electronic module can remain installed. To carry out a check, proceed as follows:

1. Loosen the screw of the Wilo-Smart Connect module cover (Fig. 28) and open the cover.
2. Check Wilo-Smart Connect module BT.
3. Close the cover again and fasten it with the screw.

Due to its design, the Wilo-Smart Connect module BT can only be plugged in in one alignment. There is no further fixing of the module itself. The Wilo-Smart Connect module cover (Fig. 28) on the upper part of the electronic module holds the module firmly in the interface.

Observe the tightening torques! Tightening torques for electronic module [▶ 46]

CAUTION

IP55 protection is only guaranteed if the Wilo-Smart Connect module BT cover is installed and screwed tight!

9 Installation of CIF module

DANGER

Risk of fatal electric shock!

Immediate danger of death if live components are touched!

- Check whether all connections are voltage-free!

CIF modules (accessories) are used for communication between pumps and building management systems. CIF modules are plugged into the electronic module (Fig. 26, Item 4)

- For twin-head pumps, only the main pump must be equipped with a CIF module.
- For pumps in Y-pipe applications in which the electronic modules are connected to each other through the Wilo Net, only the main pump also requires a CIF module.

NOTICE

Explanations on commissioning as well as application, function and configuration of the CIF module on the pump are described in the installation and operating instructions for the CIF modules.

10 Commissioning

- Electrical work: a qualified electrician must carry out the electrical work.
- Installation/dismantling: The technician must be trained in the use of the necessary tools and fixation materials.
- The product must be operated by persons who have been instructed on how the complete system functions.



DANGER

Danger of death due to lack of protective devices!

Due to missing protective devices of the electronic module or in the range of the coupling/motor, electric shock or contact with rotating parts can lead to life-threatening injuries.

- Before commissioning, protection devices such as electronic module covers or coupling covers that were removed must be reinstalled!
- An authorised technician must check the functionality of the safety devices on the pump, motor and electronic module prior to commissioning!
- Never connect the pump without the electronic module!



WARNING

Danger of injury due to fluid shooting out and components coming loose!

Not installing the pump/system correctly can lead to serious injuries during commissioning!

- Carry out all work carefully!
- Keep a safe distance during commissioning!
- Always wear protective clothing, safety gloves and safety glasses when working.

10.1 Filling and venting

CAUTION

Dry running will destroy the mechanical seal! It may cause leakage.

- Ensure that a dry run of the pump is not possible.



WARNING

There is a risk of burns or freezing upon coming into contact with the pump/system.

Depending on the pump and system operating conditions (fluid temperature), the entire pump can become very hot or very cold.

- Keep a safe distance during operation!
- Allow the system and pump to cool down to room temperature!
- Always wear protective clothing, safety gloves and safety glasses when working.



DANGER

Danger of personal injury and material damage due to extremely hot or extremely cold pressurised fluid!

Depending on the temperature of the fluid, when the venting device is opened completely, **extremely hot** or **extremely cold** fluid may escape in liquid or vapour form. Fluid may shoot out at high pressure depending on the system pressure.

- Always exercise caution when opening the venting device.
- Protect the electronic module from any water escaping when venting.

1. Fill and vent the system correctly.
2. In addition, loosen the air vent valves (Fig. I, Item 28) and vent the pump.
3. After venting the pump, tighten the air vent valves again so that no more water can escape.

CAUTION

Destruction of the differential pressure sensor!

- Never vent the differential pressure sensor!



NOTICE

- Always keep to the minimum pressure!

- To avoid cavitation noises and damage, a minimum inlet pressure must be guaranteed at the suction port of the pump. The minimum inlet pressure depends on the operating situation and the pump's duty point. Accordingly, the minimum pressure must be determined.
- The main parameters for defining the minimum inlet pressure are the NPSH value of the pump at its duty point and the vapour pressure of the fluid. The NPSH value can be found in the technical documentation of the respective pump type.



NOTICE

When pumping from an open tank (e.g. cooling tower), ensure that there is always a sufficient liquid level above the pump's suction port. This prevents the pump from running dry. The minimum inlet pressure must be observed.

10.2 Procedure after switching on the power supply during initial commissioning

As soon as the power supply is switched on, the display starts. This can take a few seconds. After the start-up process has been completed, settings can be configured (see "Control functions" [▶ 56] section).
At the same time, the motor starts running.

CAUTION

Dry running will destroy the mechanical seal! It may cause leakage.

- Ensure that a dry run of the pump is not possible.

Preventing the motor from starting when the power supply is switched on during initial commissioning:
A cable jumper is set at the digital input DI1 in the factory. The DI1 is activated at the factory as EXT. OFF.
To prevent the motor from starting during initial commissioning, the cable bridge must be removed before the power supply is switched on for the first time.
After initial commissioning, the digital input DI1 can be set as required via the initialised

display.
If the digital input is switched to inactive, the cable bridge does not have to be set again to start the motor.
When the digital input DI1 is reset to the factory setting, it is active again. The pump will not start without the cable bridge. See chapter “Application and function of the digital control inputs DI1 and DI2” [▶ 81].

10.3 Description of operating elements

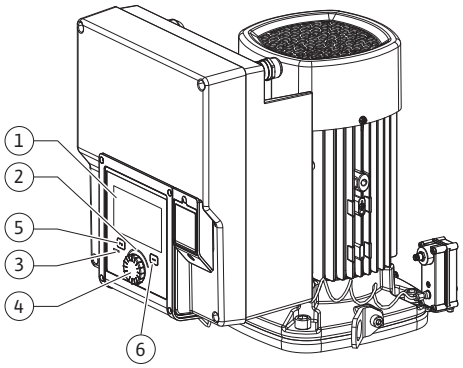

Fig. 29: Operating elements

Item	Name	Explanation
1	Graphic display	Provides information about settings and pump status. Self-explanatory user interface for setting the pump.
2	Green LED indicator	LED is lit up: Pump is supplied with voltage and ready for operation. There are no warnings and no faults.
3	Blue LED indicator	LED is lit up: Pump is influenced externally via an interface, e.g. by: • Bluetooth remote control • Setpoint setting via analogue input AI1 … AI4 • Intervention of building automation via digital input DI1, DI2 or bus communication Flashes with active twin-head pump connection.
4	Operating button	Navigate menus and edit content by turning and pressing.
5	Back button	Menu navigation: • To go back to the previous menu level (briefly press once). • To go back to the previous settings (briefly press once). • Return to the main menu (press and hold 1 x, > 2 seconds) Switches the key lock on or off (> 5 seconds) in combination with the Context button.
6	Context button	Opens the context menu with additional options and functions. Switches the key lock on or off in combination with the Back button* (> 5 seconds).

Table 17: Description of operating elements

*The configuration of the key lock makes it possible to protect the pump setting from being changed. This is the case, for example, when the pump is accessed via Bluetooth or Wilo Net via the Wilo-Smart Connect Gateway with the Wilo-Smart Connect app.

10.4 Pump operation

10.4.1 Setting of pump output

The system was designed for a certain duty point (full load point, calculated maximum heating or cooling power demand). During commissioning, the pump output (delivery head) is set according to the duty point of the system.

The factory setting does not correspond to the output required for the system. The required pump capacity is determined with the help of the pump curve diagram for the selected pump type (e.g. from the data sheet).

NOTICE

For water applications, the flow rate value shown in the display or output to the building management system applies. For other fluids, this value only reflects the tendency. If no differential pressure sensor is installed (variant … R1), the pump cannot indicate a volume flow value.

CAUTION

Risk of material damage!

An inadequate volume flow can lead to damage on the mechanical seal; the minimum volume flow depends on the speed of the pump.

- Make sure that the volume flow does not fall below the minimum value Q_{min}.

Approximate calculation of Q_{min}:

Q_{min} = 10 % x $Q_{max\ pump}$ x actual speed / max. speed

10.4.2 Settings on pump

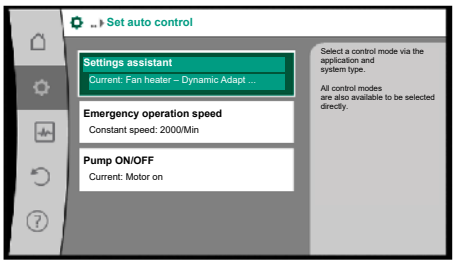

Fig. 30: Green focus: Navigation in menu

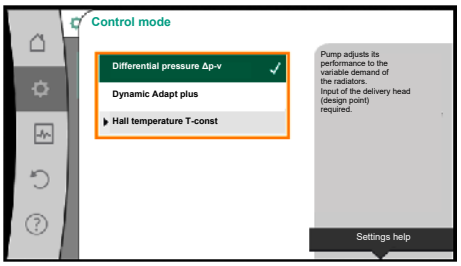

Fig. 31: Yellow focus: Adjusting the settings

Carry out settings by turning and pressing the operating button. Turn the operating button to the left or right to browse the menus or configure settings. A green focus indicates navigation in the menu. A yellow focus indicates a configuration of settings.

- Green focus: Navigation in menu.
- Yellow focus: Change settings.
- Turn: menu selection and parameter setting.
- Press: Activation of menus or confirming settings.

Press the “Back” button (“Description of operating elements” [▶ 50] table) to change the focus back to the previous focus. Consequently, the focus moves one level further up in the structure or to a previous setting.

Pressing the Back button after having changed a setting (yellow focus) without confirming the changed value returns the focus to the previous focus. The adjusted value will be discarded. The previous value remains unchanged.

If the Back button is pressed for more than 2 seconds, the Home screen opens and the pump can be operated from the main menu.

NOTICE

The changed settings are stored in the memory with a delay of 10 seconds. If the power supply is interrupted during this time, the settings are lost.

NOTICE

If there are no warning or error messages, the display on the electronic module will switch off 2 minutes after the last time it was operated.

• If the operating button is pressed or turned again within 7 minutes, the previously exited menu will appear. You can continue to configure settings.

• If the operating button is not pressed or turned for more than 7 minutes, any unconfirmed settings will be lost. Pressing the button again opens the Home screen on the display and the pump can be operated from the main menu.

10.4.3 Initial settings menu

The settings menu will appear in the display during initial commissioning of the pump.

NOTICE

The factory setting for variant ... R1 (without differential pressure sensor in delivery status) is the basic control mode “Constant speed”. The factory setting mentioned below refers to the variant with a differential pressure sensor fitted in the factory.

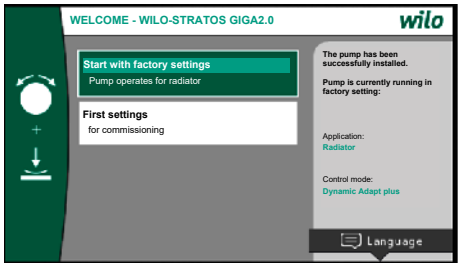

Fig. 32: Initial settings menu

- You can exit the initial settings menu by activating “Start with factory settings” menu. The display changes to the main menu. The pump continues to run using the factory settings.
- In the “Initial settings” menu, language, units and applications can be selected and adjusted. The chosen initial settings are confirmed by activating “Finish initial settings”. The display changes to the main menu.

10.4.4 Main menu

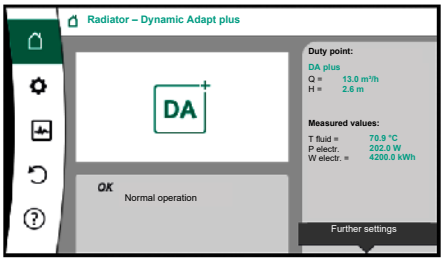

Fig. 33: Main menu

Quit the Initial settings menu to open the Home screen on the display and operate it from the main menu.

Symbol	Meaning
	Home screen
	Settings
	Diagnostics and measured values
	Restore and reset
	Help

Table 18: Main menu symbols

10.4.5 Main menu “Home screen”

Setpoints can be changed in the “Home screen” menu.

The home screen can be selected by turning the operating button to the “House” symbol.
Pressing the operating button activates the setpoint adjustment. The frame of the changeable setpoint turns yellow.
The setpoint is changed by turning the operating button right or left.
Pressing the operating button again confirms the changed setpoint. The pump accepts the value and the display returns to the main menu.

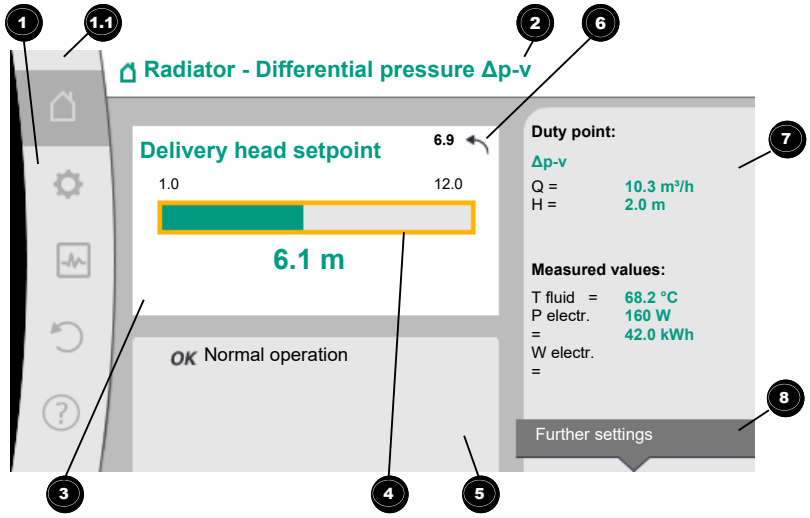

Fig. 34: Home screen

Pressing the “Back” button during setpoint adjustment discards the changed setpoint value and retains the old setpoint value. The focus returns to the “Home screen”.

NOTICE

Setpoint adjustment is not possible when Dynamic Adapt plus is active.

NOTICE

Pressing the context button ⋯ will display additional context-related options for further settings.

Pos.	Name	Explanation
1	Main menu overview	Selection of different main menus
1.1	Status area: error, warning or process information display	Indicates an on-going process, warning or error message. Blue: process or communication status display (CIF module communication) Yellow: Warning Red: Fault Grey: there are no processes running in the background, there are no warning or error messages.
2	Title bar	Display of currently set application and control mode.
3	Setpoint display field	Displays currently configured setpoints.
4	Setpoint editor	Yellow frame: you have pressed the operating button to open the setpoint editor and change the value.
5	Active influences	Display of influences on set control mode, e.g. EXT. OFF. You can display up to five active influences.
6	Reset reference	Shows the value before having changed it when the setpoint editor is active. The arrow shows that you can go back to the previous value with the “Back” button.
7	Operating data and measurement area	Shows current operating data and measured values.
8	Context menu reference	Offers context-related options in a separate context menu.

Table 19: Home screen

10.4.6 Sub-menu

Each sub-menu is made up of a list of sub-menu items.
Each sub-menu item consists of a title and an information bar.
The title lists an additional sub-menu or a downstream settings dialogue.
The information bar shows descriptive information about the available sub-menu or the downstream settings dialogue. The information bar of a settings dialogue shows the set value (e.g. a setpoint). With this display, you can check settings without having to open the settings dialogue.

10.4.7 “Settings” sub-menu

Different settings can be changed in the “Settings” menu ⚙.

Turn the operating button to the “Gear wheel” icon ⚙ to select the “Settings” menu.
Press the operating button to change the focus to the “Settings” sub-menu.
Turn the operating button to the left or right to select a sub-menu item. The selected sub-menu item has been highlighted in green.
Press the operating button to confirm your selection. The selected sub-menu or downstream settings dialogue appears.

NOTICE

There is an arrow ❶ above or below the visible menu items if there are more than four sub-menu items. Turn the operating button in the corresponding direction to open the sub-menu items on the display.

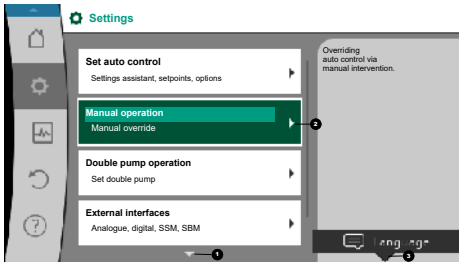

Fig. 35: Settings menu

An arrow ❶ above or below a menu area indicates that additional sub-menu items are available in this area. These sub-menu items are accessible by turning the operating button.

An arrow ❷ towards the right in a sub-menu item indicates that another sub-menu is available. Press the operating button to open this sub-menu.

If there is no arrow to the right, press the operating button to open a settings dialogue.

A note ❸ above the “Context” button shows specific functions of the “Context” menu.

Press the “Context” menu button to open the “Context” menu.

NOTICE

Briefly press the Back button in a sub-menu to return to the previous menu.

Briefly press the Back button in the main menu to return to the Home screen. If there is an error, press the “Back” button to return to the error display (“Error messages” section).

If there is an error, press and hold the “Back” button (> 1 second) from any settings dialogue or from any menu level to return to the “Home screen” or error display.

10.4.8 Settings dialogues

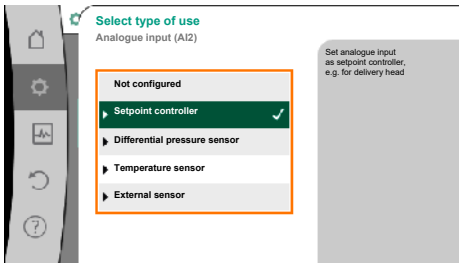

Fig. 36: Settings dialogue

Settings dialogues have been highlighted with a yellow frame and show the current setting.

Turn the operating button to the right or left to adjust the highlighted setting.

Press the operating button to confirm the new setting. The focus returns to the menu you opened.

If you do not turn the operating button before pressing, the previous setting remains unchanged.

One or more parameters can be set in the settings dialogues.

- If only one parameter can be set, the focus returns to the menu you opened after having confirmed the parameter value (pressing the operating button).
- If several parameters can be set, the focus changes to the next parameter after having confirmed a parameter value.
  If you confirm the last parameter in the settings dialogue, the focus returns to the menu you opened.
  Press the “Back” button to return the focus to the previous parameter. The previously changed value will be discarded because it had not been confirmed.
  Press the operating button to check set parameters and switch between them. In this process, existing parameters are once again confirmed, but not changed.

NOTICE

Press the operating button without selecting another parameter or adjusting another value to confirm the setting.

Press the Back button to discard the current adjustment and retain the previous setting. The menu changes to the previous setting or previous menu.

NOTICE

Pressing the context button will display additional context-related options for further settings.

10.4.9 Status area and status displays

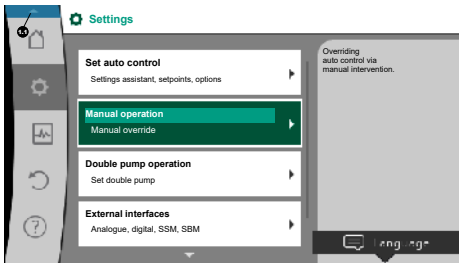

Fig. 37: Main menu status display

The status area is located on the left side above the main menu area 1.1. (see also “Home screen” [▶ 53] figure and table).

If a status is active, it is possible to display and select status menu items in the main menu. Turn the operating button to the status area to show the active status.
If an active process (e.g. software update) is quit or discarded, the status display is hidden again.

There are three different classes of status displays:

1. Display process:
   On-going processes have been highlighted in blue.
   Processes mean pump operation may deviate from the adjusted control.
   Example: software update.
2. Display warning:
   Warning messages have been highlighted in yellow.
   The pump functions are restricted if a warning has been output (see “Warning messages” [▶ 106] section).
   Example: Cable break detection on analogue input.
3. Display error:
   Error messages have been highlighted in red.
   The pump stops operation if an error has occurred. (see “Error messages” [▶ 105] section).
   Example: ambient temperature too high.

Further status displays, if available, can be displayed by turning the operating button to the corresponding symbol.

Symbol	Meaning
	Error message **Pump stopped!**
	Warning message **Pump operation restricted!**
	Communication status – a CIF module has been installed and is active. **Pump in control mode, monitoring and control by building automation available.**
	Software update started – transfer and verification **Pump continues to run in control mode until the update bundle has been fully transferred and verified.**

Table 20: Potential data displayed in the status area

Additional settings can be made in the “Context” menu, if necessary. For this purpose, press the Context button ⋯.
Press the Back button ↩ to return to the main menu.

NOTICE

A set control mode is interrupted when a process is running. The pump starts to run in the set control mode once the process is ended.

NOTICE

Repeatedly pressing or pressing and holding the Back button after an error message has occurred will open the “Error” status display and not take you back to the main menu.
The status area is highlighted in red.

11 Setting the control functions

11.1 Control functions

Basic control functions are available depending on the application.
Select control functions using the setting assistant:

- Differential pressure Δp-v
- Differential pressure Δp-c
- Index circuit Δp-c
- Dynamic Adapt plus
- Volume flow constant (Q-const.)
- Multi-Flow Adaptation
- Temperature constant (T-const.)
- Differential temperature (ΔT-const.)
- Speed constant (n-const.)
- PID control

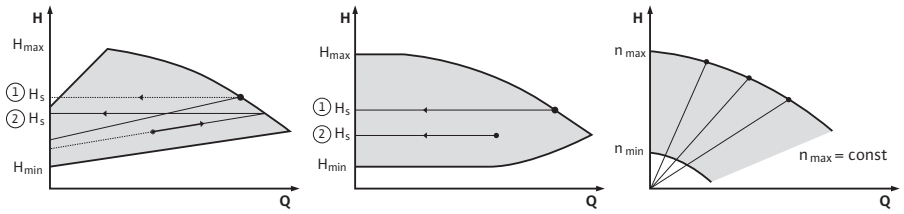

Fig. 38: Control functions

Differential pressure Δp-v

The control triggers a linear change in the differential pressure setpoint the pump must ensure between reduced differential pressure H and H_{set}.
The controlled differential pressure H increases or decreases with the flow rate.
The slope of Δp-v characteristic curve can be adjusted to the respective application by setting the percentage of H_{set} (slope Δp-v characteristic curve).

NOTICE

Options “Nominal duty point Q” and “Slope of Δp-v characteristic curve” are available in the context menu [•••] of the setpoint editor “Δp-v differential pressure setpoint”.

Options “Nominal duty point Q” and “Slope of Δp-v characteristic curve” are available in the context menu [•••] of the setpoint editor “Δp-v differential pressure setpoint”.

Δp-c is used in circuits with variable pressure and volume flows, e.g. radiators with thermostatic valves or air-conditioning devices.
A hydronic balancing is required in all circuits mentioned.

Differential pressure Δp-c

The control keeps the differential pressure generated by the pump constant over the permissible flow rate range at the set differential pressure setpoint H_{set} up to the maximum characteristic curve.
An optimised constant differential pressure control is available for the corresponding predefined applications.
Assuming a required delivery head to be set according to the design point, the pump variably adjusts the pump output to the required volume flow. The volume flow varies due to the open and closed valves on the consumer circuits. The pump output is adjusted to the requirements of the consumer load and the energy requirement is reduced.

Δp-c is used in circuits with variable pressure and volume flows, e.g. underfloor heating or ceiling cooling. A hydronic balancing is required in all circuits mentioned.

Index circuit Δp-c

An optimised constant differential pressure control is available for “index circuit Δp-c”. This differential pressure control ensures supply in a widely branched, possibly poorly balanced system.
The pump takes into account the point in the system which is the most unfavourable to supply.
For this purpose, the pump requires a differential pressure sensor which is installed at this point (“index circuit”) in the system.

The delivery head must be adjusted to the required differential pressure. The pump output is adjusted to this point as required.



NOTICE

The differential pressure sensor mounted at the factory on the pump can be operated in parallel to the differential pressure sensor at the index circuit, e.g. for heat quantity measurement on the pump. The differential pressure sensor mounted at the factory is already configured at analogue input AI1.
Together with the temperature sensors configured on AI3 and AI4, the heat quantity measurement function uses this sensor on AI1 to determine the volume flow.
The differential pressure sensor at the index circuit must be configured at analogue input AI2 in this configuration.
For this purpose, “Other position” must be selected as the flange position. See chapter “Application and function of the analogue inputs AI1 ... AI4” [▶ 85].

Dynamic Adapt plus (factory setting)

The control mode Dynamic Adapt plus autonomously adjusts the pump output to the requirements of the system. Setpoint adjustment is not necessary.
It is optimal for circuits whose design points are unknown.

The pump continuously adjusts its delivery rate to the requirements of the consumer and status of the open and closed valves and thus significantly reduces the set pump energy.

Dynamic Adapt plus is used in consumer circuits with variable pressure and volume flows, e.g. radiators with thermostatic valves or underfloor heating with room-controlled actuating drives.
Hydronic balancing is required in all circuits mentioned.

In hydraulic circuits with invariable resistances, such as generator circuits or feeder circuits (to hydraulic shunts, differential pressure-less distributors or heat exchangers), another control mode has to be selected, e.g. volume flow constant (Q-const), differential temperature constant (ΔT-const), differential pressure (Δp-c) or Multi-Flow Adaptation.

Volume flow constant (Q-const.)

The pump controls a set volume flow Q_{set} in its characteristic curve.

Multi-Flow Adaptation

The volume flow in the generator or feeder circuit (primary circuit) is adjusted to the volume flow in the consumer circuits (secondary circuit) with the Multi-Flow Adaptation control mode.
Multi-Flow Adaptation is set on the Wilo-Stratos GIGA2.0 feeder pump in the primary circuit upstream of a hydraulic shunt, for example.
The Wilo-Stratos GIGA2.0 feeder pump is connected to the Wilo-Stratos GIGA2.0 and also Wilo-Stratos MAXO pumps in the secondary circuits with Wilo Net data cable.
The feeder pump continuously receives the respective required volume flow from each individual secondary pump at short intervals.
The sum of the required volume flows from all secondary pumps is set by the feeder pump as the setpoint volume flow.
During commissioning, all associated secondary pumps must be registered with the primary pump so that it takes their volume flows into account. See “Settings menu – Set control mode” [▶ 68] section.

Temperature constant (T-const)

The pump controls to a set target temperature T_{target}.
The actual temperature to be controlled is determined by an external temperature sensor, which is connected to the pump.

Differential temperature constant (ΔT-const)

The pump controls to a set differential temperature ΔT_{target} (e.g. difference from feed and return temperature).

Actual temperature through:

- two temperature sensors connected to the pump.

Speed constant (n-const./factory setting for Stratos GIGA2.0 ... R1)

The speed of the pump is kept at a set constant speed.
The speed range depends on the motor and pump type.

User-defined PID control

The pump controls based on a user-defined control function. PID control parameters Kp, Ki and Kd have to be manually set.

The PID controller used in the pump is a standard PID controller.
The controller compares the measured actual value with the specified setpoint and attempts to match the actual value to the setpoint as closely as possible.
Provided the appropriate sensors are used, various controls can be implemented.
When selecting a sensor, attention must be paid to the configuration of the analogue input.
The control behaviour can be optimised by changing the P, I and D parameters.

The direction of control action can be adjusted by switching the control inversion on or off.

11.2 Additional control functions

11.2.1 No-Flow Stop

The additional control function “No-Flow Stop” continuously monitors the actual volume flow of the heating/cooling system.
If the volume flow decreases due to closing valves and falls below the “No-Flow Stop Limit” threshold set for No-Flow Stop, the pump is stopped.
The pump checks every 5 minutes (300 s) whether the volume flow demand is increasing again. When the volume flow increases again, the pump continues running in its set control mode in normal operation.

NOTICE

A volume flow increase relative to the set minimum volume flow “No-Flow Stop Limit” is checked within a time interval of 10 s.

The reference volume flow Q_{ref} can be set between 10 % and 25 % of the maximum volume flow Q_{Max} depending on the pump size.

Field of application of No-Flow Stop:

a pump in a consumer circuit with control valves in heating or cooling (with radiators, fan heaters, air-conditioning devices, underfloor heating/cooling, ceiling heating/cooling, concrete core heating/cooling) as an additional function for all control modes except Multi-Flow Adaptation and volume flow Q-const.

NOTICE

This function is deactivated in the factory settings and must be activated if required.

NOTICE

The additional control function “No-Flow Stop” is an energy-saving function. Reducing unnecessary running times saves electrical pumping energy.

NOTICE

The additional “No-Flow Stop” control function is available for suitable applications only (see “Pre-defined applications in the setting assistant” [▶ 65] section)! The additional control function “No-Flow Stop” cannot be combined with the additional control function “$Q\text{-}Limit_{Min}$”!

11.2.2 Q-Limit Max

The additional control function “$Q\text{-}Limit_{Max}$” can be combined with other control functions (differential pressure control (Δp-v, Δp-c), cumulated volume flow, temperature control (ΔT control, T control)). It makes it possible to limit the maximum volume flow to approx. 25 % – 90 %, depending on pump type. When the set value is reached, the pump is controlled on the characteristic curve along the limit – never beyond.

NOTICE

When using Q-Limit$_{Max}$ in non-hydraulically balanced systems, some areas can be inadequately supplied and freeze!

- Carry out hydronic balancing!

11.2.3 Q-Limit Min

The additional control function “Q-Limit$_{Min}$” can be combined with other control functions (differential pressure control (Δp-v, Δp-c), cumulated volume flow, temperature control (ΔT control, T control)). This makes it possible to ensure a minimum volume flow of 15 % – 90 % of Q_{Max} within the hydraulic characteristic curve. When the set value is reached, the pump is controlled on the characteristic curve along the limit until the maximum delivery head is reached.

NOTICE

The additional “Q-Limit$_{Min}$” control function cannot be combined with the additional “No-Flow Stop” control function!

11.2.4 Nominal duty point Q

The optionally configurable nominal duty point for the differential pressure control Δp-v significantly simplifies adjustment by adding the required volume flow at the design point. The additional input of the required volume flow at the design point ensures that the Δp-v characteristic curve runs through the design point.
The slope of the Δp-v characteristic curve is optimised.

11.2.5 Gradient Δp-v characteristic curve

The additional function “Gradient Δp-v characteristic curve” can be used for the differential pressure control Δp-v. A factor can be set on the pump to optimise the Δp-v control characteristic. The factor 50 % (½ H_{set}) is pre-set at the factory. In some installations with special pipe network characteristics, there may be inadequate or excessive supply. The factor reduces (< 50 %) or increases (> 50 %) the Δp-v delivery head at Q=0 m³/h.

- Factor < 50 %: Δp-v characteristic curve becomes steeper.
- Factor > 50 %: Δp-v characteristic curve becomes flatter. Factor 100 % is equal to an Δp-c control.

The excessive or inadequate supply can be compensated by adjusting the factor.

- In case of inadequate supply in the partial load range, the value must be increased.
- In case of excessive supply in the partial load range, the value can be reduced. More energy can be saved and flow noises are reduced.

11.2.6 Multi-Flow Adaptation mixer

In the case of secondary circuits with in-built 3-way mixers, the mixed volume flow can be calculated so that the primary pump takes the actual demand of the secondary pumps into account. To do this, the following has to be carried out:

temperature sensors must be mounted on the secondary pumps in the respective feed and return of the secondary circuits and the heating or cooling quantity measurement must be activated.
Temperature sensors are mounted on the feeder pump at the primary feed upstream of the heat exchanger or hydraulic shunt and at the secondary feed behind it. The function Multi-Flow Adaptation mixer is activated on the feeder pump.

11.3 Settings assistant

Thanks to the setting assistant, it is not necessary to be familiar with the matching control mode and additional option of the respective application.
You can select the matching control mode and additional option in the application’s setting assistant.
You can also directly select a basic control mode in the setting assistant.

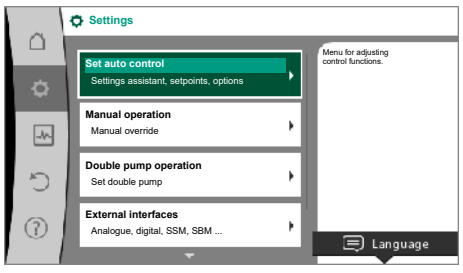

Fig. 39: Settings menu

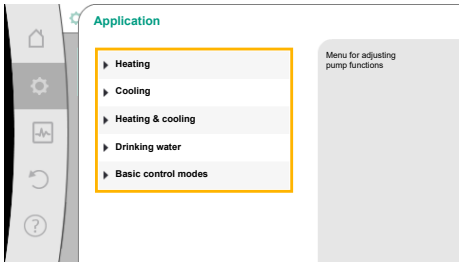

Fig. 40: Application selection

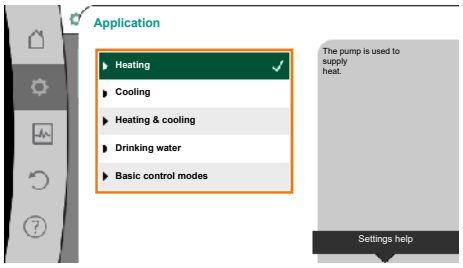

Fig. 41: Example – “Heating” application

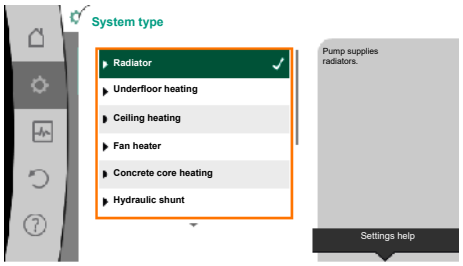

Fig. 42: Example – “Radiator” system type

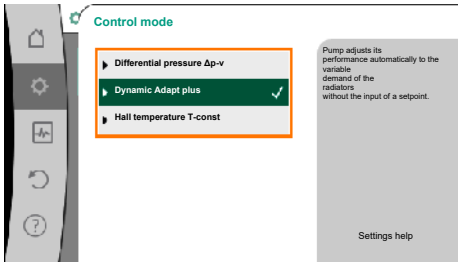

Fig. 43: Example – “Dynamic Adapt plus” control mode

Selection via the application

In the “Settings” menu , select the following in turn:

1. “Set control mode”
2. “Setting assistant”

Possible application selection:

The **“Heating” application** is used as an **example**.

Select the “Heating” application by turning the operating button and press to confirm.

Different system types are available depending on the applications.

The following system types are available for the “Heating” application:

System types for heating application
▸ Radiator
▸ Underfloor heating
▸ Ceiling heating
▸ Fan heater
▸ Concrete core heating
▸ Hydraulic shunt
▸ Differential pressure-less distributor
▸ Buffer heating
▸ Heat exchanger
▸ Heat source circuit (heat pump)
▸ District heating circuit
▸ Basic control modes

Table 21: Selection system type for heating application

Example: “Radiator” system type

Select the “Radiator” system type by turning the operating button and press to confirm.

Different control modes are available depending on the system type.

For the “Radiator” system type in the “Heating” application, the following control modes are available:

Control mode
▸ Differential pressure Δp-v
▸ Dynamic Adapt plus
▸ Hall temperature T-const

Table 22: Selection of control mode for radiator system type in the heating application

Example: Control mode **“Dynamic Adapt plus”**

Select “Dynamic Adapt plus” control mode by turning the operating button and press to confirm.

When the selection is confirmed, “Setting assistant” will be displayed in the menu.

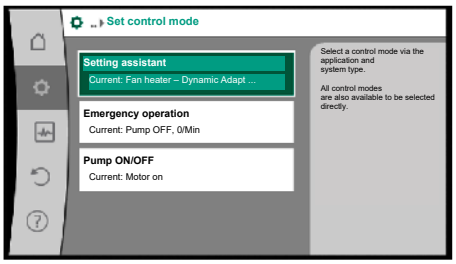

Fig. 44: Setting assistant

NOTICE

The differential pressure sensor of the Stratos GIGA2.0-I/-D is already configured at the factory to 2 ... 10 V at the analogue input.
No other setting of the analogue input is required for a control mode with differential pressure (Dynamic Adapt plus, Δp-v, Δp-c) and volume flow constant (Q-const.).
If the analogue input has not been configured at the factory or if the signal 2 ... 10 V or 4 ... 20 mA is not recognised, the “Cable break in analogue 1” warning is displayed
For the Stratos GIGA2.0-I/-D ... R1, no analogue input is configured at the factory. The analogue input must be actively configured for every control mode.
If no analogue input is configured for a control mode with differential pressure (Dynamic Adapt plus, Δp-v, Δp-c) and volume flow constant (Q-const.), the warning “Delivery head/flow unknown” (W657) is displayed.

Direct selection of a basic control mode

In the “Settings” menu, select the following in turn:

1. “Set control mode”
2. “Setting assistant”
3. “Basic control modes”

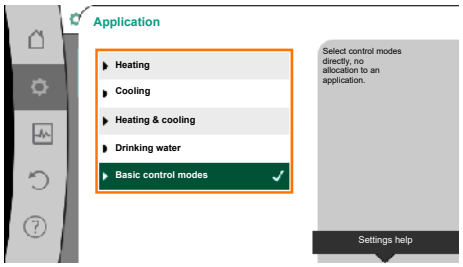

Fig. 45: Application selection “Basic control modes”

The following basic control modes are available:

Basic control modes
▸ Differential pressure Δp-v
▸ Differential pressure Δp-c
▸ Index circuit Δp-c
▸ Dynamic Adapt plus
▸ Volume flow Q-const
▸ Multi-Flow Adaptation
▸ Temperature T-const.
▸ Temperature ΔT-const
▸ Speed n-const
▸ PID control

Table 23: Basic control modes

Every control mode, with the exception of speed n-const, additionally requires the selection of the actual value or sensor source (analogue input AI1 ... AI4).

NOTICE

For the Stratos GIGA2.0, the differential pressure sensor is already pre-configured to an analogue input at the factory. For Stratos GIGA2.0 ... R1, no analogue input is preconfigured yet.

When you confirm a selected basic control mode, the “Setting assistant” sub-menu appears, displaying the selected control mode in the information bar.
You see more menus under the display. These are intended for parameter configuration.
For example: Input of the setpoints for differential pressure control, activation/deactivation of the “No-Flow Stop” function or emergency operation. In an emergency operation, you can choose between “Pump ON” and “Pump OFF”. If “Pump ON” is selected, an emergency operation speed can be set to which the pump automatically switches.

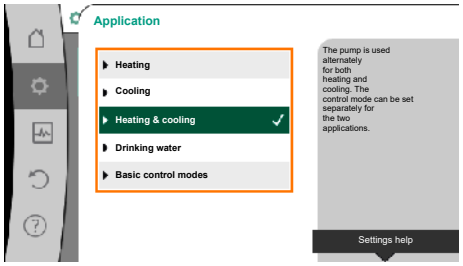

Fig. 46: "Heating & cooling" application selection

Heating & cooling application

The "Heating & cooling" application combines both the applications if both heating and cooling occurs in the same hydraulic circuit. The pump is set separately for both applications and can switch between both applications.

In the "Settings" menu , select the following in turn:

1. "Set control mode"
2. "Setting assistant"
3. "Heating & cooling"

Select the control mode for the "Heating" application first.

System types for heating application	Control mode
▸ Radiator	Differential pressure Δp-v Dynamic Adapt plus Hall temperature T-const
▸ Underfloor heating ▸ Ceiling heating	Differential pressure Δp-c Dynamic Adapt plus Hall temperature T-const
▸ Fan heater	Differential pressure Δp-v Dynamic Adapt plus Hall temperature T-const.
▸ Concrete core heating	Differential pressure Δp-c Dynamic Adapt plus Feed/return ΔT Volume flow cQ
▸ Hydraulic shunt	Sec. feed temperature T-const. Return ΔT Multi-Flow Adaptation Volume flow cQ
▸ Differential pressure-less distributor ▸ Buffer heating	Multi-Flow Adaptation Volume flow cQ
▸ Heat exchanger	Sec. feed temperature T-const. Feed ΔT Multi-Flow Adaptation Volume flow cQ
▸ Heat source circuit (heat pump)	Feed/return ΔT Volume flow cQ
▸ District heating circuit	Differential pressure Δp-c Differential pressure Δp-v Index circuit Δp-c
▸ Basic control modes	Differential pressure Δp-c Differential pressure Δp-v Index circuit Δp-c Dynamic Adapt plus Volume flow cQ Temperature T-const Temperature ΔT-const. Speed n-const.

Table 24: Selection system type and control mode for "Heating" application

After having selected the desired system type and control mode for the “Heating” application, select the control mode for the “Cooling” application.

System types for cooling application	Control mode
▸ Ceiling cooling ▸ Underfloor cooling	Differential pressure Δp-c Dynamic Adapt plus Hall temperature T-const
▸ Air-conditioning device	Differential pressure Δp-v Dynamic Adapt plus Hall temperature T-const.
▸ Concrete core cooling	Differential pressure Δp-c Dynamic Adapt plus Feed/return ΔT Volume flow cQ
▸ Hydraulic shunt	Feed temperature T-const. Return ΔT
▸ Differential pressure-less distributor ▸ Buffer cooling	Multi-Flow Adaptation Volume flow cQ
▸ Heat exchanger	Feed temperature T-const Feed ΔT
▸ Re-cooling circuit	Volume flow cQ
▸ District cooling circuit	Differential pressure Δp-c Differential pressure Δp-v Index circuit Δp-c
▸ Basic control modes	Differential pressure Δp-c Differential pressure Δp-v Index circuit Δp-c Dynamic Adapt plus Volume flow cQ Temperature T-const Temperature ΔT-const. Speed n-const.

Table 25: Selection of system type and control mode for “Cooling” application

Every control mode, with the exception of speed n-const., additionally requires the selection of the actual value or sensor source (analogue input AI1 ... AI4).

NOTICE

Control mode temperature ΔT-const.

In the pre-defined applications, the signs and setting ranges for the set-point temperature (ΔT-const.) are pre-set to match the application and thus the effect on the pump (increase or reduction in speed) is pre-set. When setting via “Basic control mode”, the sign and setting range must be configured according to the desired effect.

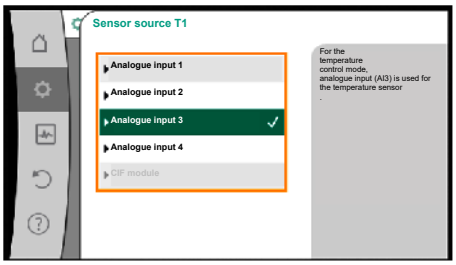

Fig. 47: Assignment of sensor source

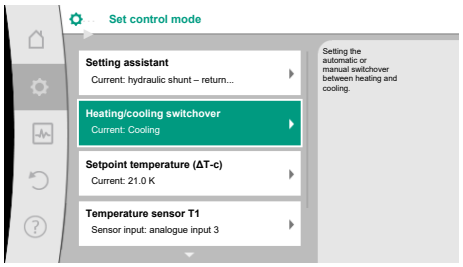

Fig. 48: Heating/cooling switchover

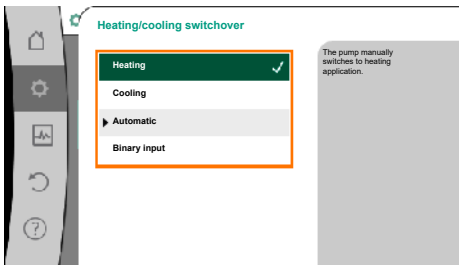

Fig. 49: Heating/cooling switchover_Heating

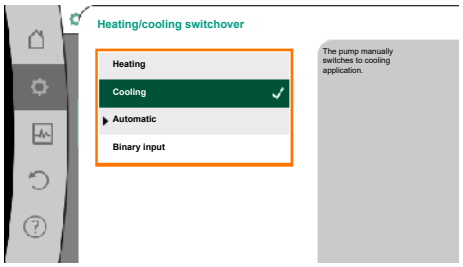

Fig. 50: Heating/cooling switchover_Cooling

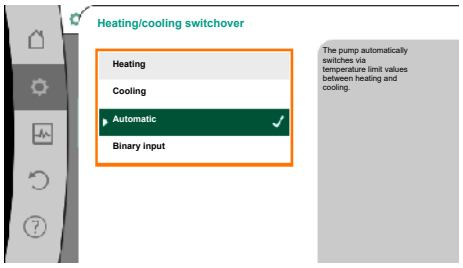

Fig. 51: Heating/cooling switchover_Automatic

If the selection is made, the sub-menu “Setting assistant” will appear with the display of selected system type and control mode.

NOTICE

The menu “Heating/cooling switchover” for further adjustments is available only if all settings have been made for “Heating & Cooling” application.

Heating/cooling switchover

First select “Heating” in the “Heating/cooling switchover” menu.
Then configure additional settings (e.g. setpoint etc.) in the “Set control mode” menu.

The settings for cooling are made once the specifications for heating are completed. To do this, select “Cooling” in the “Heating/cooling switchover” menu.

More settings (e.g. setpoint, $Q\text{-}Limit_{Max}$, etc.) can be made via the “Set control mode” menu.

In order to adjust the automatic switchover between heating and cooling, select “Automatic” and enter the switchover temperature each for heating and cooling.

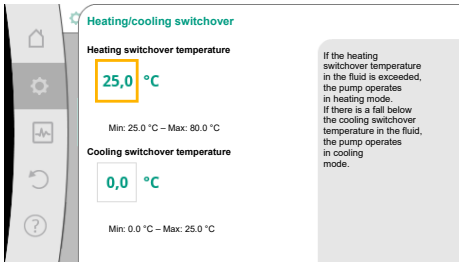

Fig. 52: Heating/cooling switchover_Switchover temperatures

If the switchover temperatures are exceeded or not reached, the pump automatically switches between heating and cooling.

NOTICE

If the switchover temperature for heating in the fluid is exceeded, the pump operates in heating mode.
If the fluid temperature drops below the cooling switchover temperature, the pump operates in cooling mode.

Once the set switchover temperatures have been reached, the pump initially switches to “Standby” for 15 minutes and then runs in the other mode.

In the temperature range between the two switchover temperatures, the pump remains inactive. It conveys the fluid occasionally only for measuring the temperature.

Proceed as follows to prevent inactivity:

• Set the switchover temperatures for heating and cooling to the same temperature.

• Select the switchover method using a binary input.

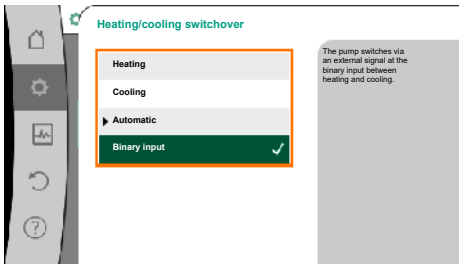

Fig. 53: Heating/cooling switchover_Binary input

For an external switchover between “Heating/cooling”, select “Binary input” in the “Heating/cooling switchover” menu.

The binary input must be set to “Switching heating/cooling” function.

NOTICE

When using the heating/cooling quantity measurement, the energy is automatically logged in the respective correct counter for heat and cooling energy meter.

11.4 Pre-defined applications in the setting assistant

The following applications can be selected via the setting assistant:

Pre-defined system types with control modes and optional additional control functions in the setting assistant

Heating application

System type/control mode	No-Flow Stop	Q-Limit$_{Max}$	Q-Limit$_{Min}$	Multi-Flow Adaptation Mixer
Radiator				
Differential pressure Δp-v	X	X		
Dynamic Adapt plus				
Hall temperature T-const.		X		
Underfloor heating				
Differential pressure Δp-c	X	X		
Dynamic Adapt plus				
Hall temperature T-const.		X		
Ceiling heating				
Differential pressure Δp-c	X	X		
Dynamic Adapt plus				
Hall temperature T-const.		X		
Fan heater				
Differential pressure Δp-v	X	X		
Dynamic Adapt plus				
Hall temperature T-const.		X		

System type/control mode	No-Flow Stop	Q-Limit$_{Max}$	Q-Limit$_{Min}$	Multi-Flow Adaptation Mixer
Concrete core heating				
Differential pressure Δp-c	X	X		
Dynamic Adapt plus				
Feed/return ΔT		X	X	
Volume flow Q-const.				
Hydraulic shunt				
Sec. feed temperature T-const.		X		
Return Δ-T		x	●	
Multi-Flow Adaptation			X	X
Volume flow Q-const.				
Differential pressure-less distributor				
Multi-Flow Adaptation			X	X
Volume flow Q-const.				
Buffer heating				
Multi-Flow Adaptation			X	X
Volume flow Q-const.				
Heat exchanger				
Sec. feed temperature T-const.		X		
Feed Δ-T		x	●	
Multi-Flow Adaptation			X	X
Volume flow Q-const.				
Heat source circuit heat pump				
Feed/return ΔT		X	X	
Volume flow Q-const.				
District heating circuit				
Differential pressure Δp-c	X	X		
Differential pressure Δp-v	X	X		
Index circuit Δp-c		X	X	
Basic control modes				
Differential pressure Δp-c	X	X	X	
Differential pressure Δp-v	X	X	X	
Index circuit Δp-c	X	X	X	
Dynamic Adapt plus				
Volume flow Q-const				
Multi-Flow Adaptation			X	X
Temperature T-const.	x	X	X	
Temperature ΔT-const.	X	X	X	
Speed n-const.	X	X	x	

●: permanently activated additional control function
x: available additional control function for the control mode

Table 26: Heating application

Pre-defined system types with control modes and optional additional control functions in the setting assistant

Cooling application

System type/control mode	No-Flow Stop	Q-Limit$_{Max}$	Q-Limit$_{Min}$	Multi-Flow Adaptation Mixer
Ceiling cooling				
Differential pressure Δp-c	X	X		
Dynamic Adapt plus				
Hall temperature T-const.		X		
Underfloor cooling				
Differential pressure Δp-c	X	X		
Dynamic Adapt plus				
Hall temperature T-const.		X		
Air-conditioning device				
Differential pressure Δp-v	X	X		
Dynamic Adapt plus				
Hall temperature T-const.		X		
Concrete core cooling				
Differential pressure Δp-c	X	X		
Dynamic Adapt plus				
Feed/return ΔT		X	X	
Volume flow Q-const.				
Hydraulic shunt				
Sec. feed temperature T-const.		X		
Return Δ-T		x	●	
Multi-Flow Adaptation			X	X
Volume flow Q-const.				
Differential pressure-less distributor				
Multi-Flow Adaptation			X	X
Volume flow Q-const.				
Buffer cooling				
Multi-Flow Adaptation			X	X
Volume flow Q-const.				
Heat exchanger				
Sec. feed temperature T-const.		X		
Feed Δ-T		x	●	
Multi-Flow Adaptation			X	X
Volume flow Q-const.				
Re-cooling circuit				
Volume flow Q-const.				
District cooling circuit				
Differential pressure Δp-c	X	X		
Differential pressure Δp-v	X	X		
Index circuit Δp-c		X	X	
Basic control modes				
Differential pressure Δp-c	X	X	X	
Differential pressure Δp-v	X	X	X	
Index circuit Δp-c	X	X	X	
Dynamic Adapt plus				
Volume flow Q-const				
Multi-Flow Adaptation			X	X
Temperature T-const.	x	X	X	

System type/control mode	No-Flow Stop	Q-Limit$_{Max}$	Q-Limit$_{Min}$	Multi-Flow Adaptation Mixer
Temperature ΔT-const.	X	X	X	
Speed n-const.	X	X	x	

●: permanently activated additional control function
x: available additional control function for the control mode

Table 27: Cooling application

Pre-defined system types with control modes and optional additional control functions in the setting assistant

Drinking water application

NOTICE

Stratos GIGA2.0 is not approved for transporting drinking water! Only system types for heating the drinking water with heating water are intended in this application.

System type/control mode	No-Flow Stop	Q-Limit$_{Max}$	Q-Limit$_{Min}$	Multi-Flow Adaptation Mixer
Drinking water storage tank				
Feed/return ΔT				
Sec. feed temperature T-const.				
Volume flow Q-const.				
Basic control modes				
Differential pressure Δp-c	X	X	X	
Differential pressure Δp-v	X	X	X	
Index circuit Δp-c	X	X	X	
Dynamic Adapt plus				
Volume flow Q-const				
Multi-Flow Adaptation			X	
Temperature T-const.	x	X	X	
Temperature ΔT-const.	X	X	X	
Speed n-const.	X	X	x	

●: permanently activated additional control function
x: available additional control function for the control mode

Table 28: Drinking water application

11.5 Settings menu – Set auto control

The “Set control mode” menu described below only provides the menu items for selection that can also be used in the currently selected control function.
For this reason, the list of potential menu items may be much longer than the number of displayed menu items at any one time.

NOTICE

Each control mode is configured with a default parameter as a factory setting. When changing the control mode, previously set configurations such as external sensors or operating status are not carried over. All parameters must be set again.

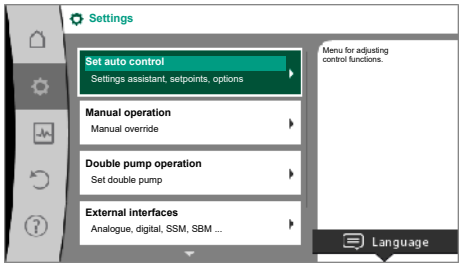

Fig. 54: Set control mode

Settings menu	Description
Setting assistant	Setting the control mode via application and system type.
Heating/cooling switchover Only visible if “Heating & Cooling” has been selected in the setting assistant.	Adjust the automatic or manual switchover between heating and cooling. When selecting “Heating/cooling switchover” in the setting assistant you must enter when the pump operates in the corresponding mode. In addition to a manual selection of “Heating or cooling”, options “Automatic” or “Switchover through a binary input” are also available. Automatic: Fluid temperatures are requested as decision-making criteria for the switchover after heating or cooling. Binary input: An external binary signal for controlling of “Heating and cooling” is queried.
Heating/cooling temperature sensor Only visible if automatic switchover is selected in setting assistant “Heating & Cooling” and “Heating/cooling switchover”.	Setting the temperature sensor for automatic switchover between heating and cooling.
Delivery head setpoint Visible for active control modes, which require a delivery head as setpoint.	Setting the setpoint of the delivery head H_S for the control mode.
Setpoint volume flow (Q-const) Visible for active control modes, which require a volume flow as setpoint.	Setting the volume flow setpoint for the control mode “Volume flow Q-const”
Feeder pump correction factor Visible for Multi-Flow Adaptation, which offers a correction value.	Correction factor for the volume flow of the feeder pump in the control mode “Multi-Flow Adaptation”. The setting range differs depending on the system type in the applications. Can be used for a supplement to the total volume flow from the secondary pumps for additional protection against inadequate supply.
Selection of secondary pumps Visible for Multi-Flow Adaptation.	Selecting of secondary pumps which are used for measuring the volume flow in Multi-Flow Adaptation.
Multi-Flow Adaptation Overview Visible for Multi-Flow Adaptation.	Overview of the number of connected secondary pumps and their requirements.
Volume flow offset Visible for Multi-Flow Adaptation.	Pumps without Wilo Net communication can be supplied with an adjustable offset volume flow in the Multi-Flow Adaptation system.
Multi-Flow Adaptation mixer Visible for Multi-Flow Adaptation.	In the case of secondary pumps in circuits with mixers, the mixed volume flow can be determined and therefore the actual demand can be ascertained.
Substitute value volume flow Visible for Multi-Flow Adaptation.	Setting of the substitute value for the volume flow requirement for the primary pump if the connection to the secondary pumps is interrupted.

Settings menu	Description
Setpoint temperature (T-const) Visible for active control modes, which require an absolute temperature as setpoint.	Setting the setpoint of the temperature for the control mode “Constant Temperature (T-const)”.
Setpoint temperature (ΔT-const.) Visible for active control modes, which require an absolute temperature difference as setpoint.	Setting the setpoint of the temperature difference for the control mode “Constant Temperature Difference (ΔT-const.)”.
Setpoint speed Visible for active control modes, which require speed as setpoint.	Setting the setpoint of the speed for the control mode “Constant Speed (n-const.)”.
Setpoint PID Visible for user-defined control.	Setting the setpoint of the user-defined control via PID.
External setpoint source Visible if an external setpoint source (analogue input or CIF module) was selected previously in the context menu.	Linking the setpoint to an external setpoint source and setting the setpoint source.
Temperature sensor T1 Visible for active control modes, which require a temperature sensor as actual value (constant temperature).	Setting first sensor (1), which is used for temperature control (T-const., ΔT-const.).
Temperature sensor T2 Visible for active control modes, which require a second temperature sensor as actual value (difference temperature control).	Setting the second sensor (2, ΔT-const) used for temperature control.
Free sensor input Visible for user-defined control.	Setting the sensor for user-defined PID control.
External delivery head sensor Visible for index circuit evaluator Δp-c, which requires a differential pressure as actual value.	Setting the external sensor for the delivery head with index circuit evaluator.
No-Flow Stop Visible for active control modes, which support the additional function “No-Flow Stop”. (see “Pre-defined applications in the setting assistant” [▶ 65] table).	Setting automatic detection of closed valves (no flow).
$Q\text{-}Limit_{Max}$ Visible for active control modes, which support additional control function “$Q\text{-}Limit_{Max}$”. (see “Pre-defined applications in the setting assistant” [▶ 65] table).	Setting an upper threshold of the volume flow.
$Q\text{-}Limit_{Min}$ Visible for active control modes, which support the additional control function “$Q\text{-}Limit_{Min}$”. (see “Pre-defined applications in the setting assistant” [▶ 65] table).	Setting a lower threshold of the volume flow.
Emergency operation Visible for active control modes that reset to a fixed speed.	If the set control mode fails (e.g. sensor signal error), you can choose between “Pump ON” and “Pump OFF”. If “Pump ON” is selected, a constant speed can be set to which the pump automatically switches.
PID parameter Kp Visible for user-defined PID control.	Setting the Kp factor for the user-defined PID control.
PID parameter: Ki Visible for user-defined PID control.	Setting the Ki factor for the user-defined PID control.
PID parameter Kd Visible for user-defined PID control.	Setting the Kd factor for the user-defined PID control.
PID: Inversion Visible for user-defined PID control.	Setting the inversion for the user-defined PID control.
Pump On/Off Always visible.	Switching the pump on/off with low priority. A MAX, MIN, MANUAL override switches the pump on.

Table 29: Settings menu – Set control mode

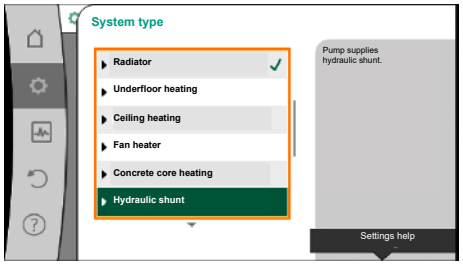

Fig. 55: “Hydraulic shunt” system type

Example: “Multi-Flow Adaptation” via **“Hydraulic shunt” system type**

Example: “Hydraulic shunt” system type

Select the “Hydraulic shunt” system type by turning the operating button and press to confirm.

Different control modes are available depending on the system type.

For the “Hydraulic shunt” system type in the “Heating” application, the following control modes are available:

Control mode
▸ Sec. feed temperature T-const.
▸ Return ΔT
▸ Multi-Flow Adaptation
▸ Volume flow Q-const

Table 30: Selection of control mode for Hydraulic shunt system type in the heating application

Example: “Multi-Flow Adaptation” control mode

Select the “Multi-Flow Adaptation” control mode by turning the operating button and press to confirm.

When the selection is confirmed, “Setting assistant” will be displayed in the menu.

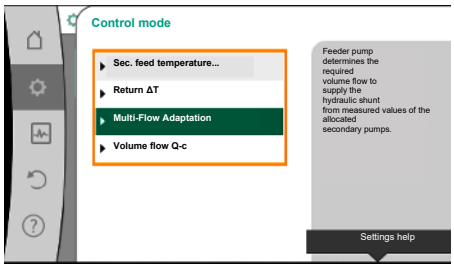

Fig. 56: Example “Multi-Flow Adaptation” control mode

Additional settings must be made.

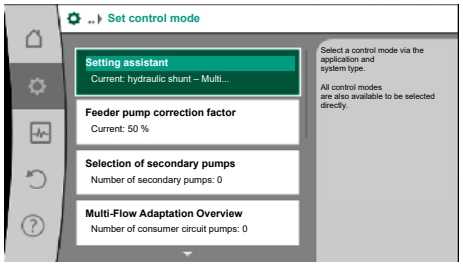

Fig. 57: Set control mode

Select secondary pumps that have to be supplied downstream of the hydraulic shunt and connect them to Wilo Net.

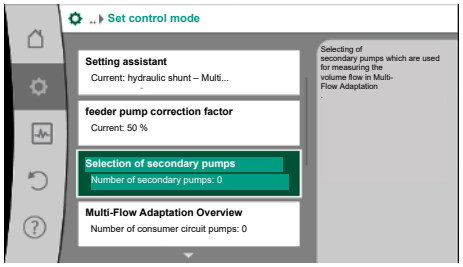

Fig. 58: Setting assistant – Selection of secondary pumps

NOTICE

A twin-head pump as primary pump or twin-head pumps as secondary pumps in the Multi-Flow Adaptation network must first be configured in this way. Only then adjust all the settings for Multi-Flow Adaptation.
If subsequent changes are made to the twin-head pump configurations, the settings for Multi-Flow Adaptation must be checked and corrected if necessary.

Select “Selection of secondary pumps” by turning the operating button and press to confirm.

Each partner pump has to be selected as secondary pump from the pumps detected by Wilo Net.

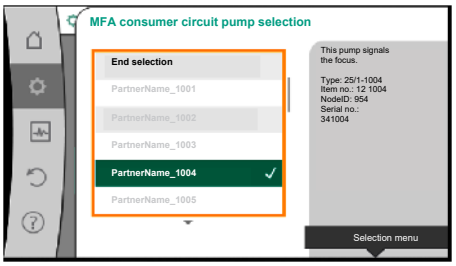

Fig. 59: Selection of secondary pumps for Multi-Flow Adaptation

Select the partner pump by turning the operating button and press to confirm.
When pressed, the white tick appears on the selected pump.
The secondary pump indicates for its part on the display that it has been selected.

All other secondary pumps are selected in the same way. Then press the Back button to go back to the “Set control mode” menu.

When secondary pumps are installed in a circuit with a mixer, the mixed volume flow can be taken into account. For this purpose, select and activate the additional control function Multi-Flow Adaptation mixer.

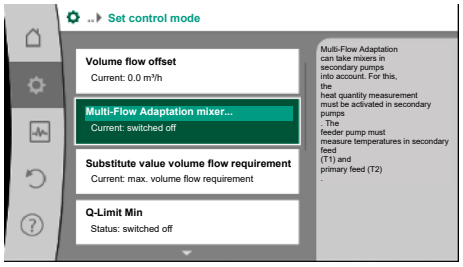

Fig. 60: Set control mode: Multi-Flow Adaptation mixer

To be able to use the function, the temperatures on the feeder pump have to be recorded:

- in the secondary feed (T1) downstream of the hydraulic shunt
- in the primary feed (T2) upstream of the hydraulic shunt

For this purpose, connect temperature sensors to the analogue inputs AI3 and AI4.

NOTICE

In order to determine the mixed volume flow, the heat quantity measurement function with a connected temperature sensor in the secondary feed and secondary return must always be activated on the secondary pumps with mixer.

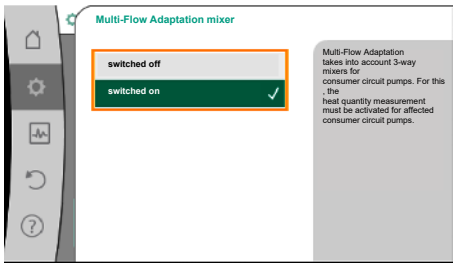

Fig. 61: Multi-Flow Adaptation mixer

Select “Switched on” by turning the operating button and press to confirm.

The temperature sensors on the feeder pump must then be configured on the analogue inputs AI3 and AI4. To do this, select the temperature sensor T1 for the temperature of the secondary feed in the “Set control mode” menu.

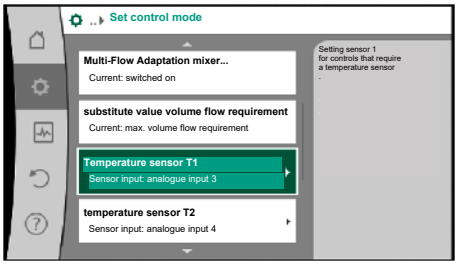

Fig. 62: Multi-Flow Adaptation mixer: Temperature sensors

In this way, the analogue input AI3 is automatically configured to signal type PT1000 and used as the actual temperature value T1.
Proceed in the same way with the temperature sensor T2 on analogue input AI4.

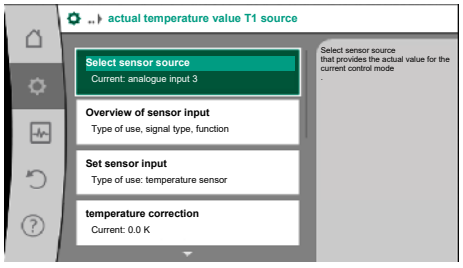

Fig. 63: Actual temperature value T1 source

NOTICE

Only the analogue inputs AI3 and AI4 of the Stratos GIGA2.0 can process signal type PT1000.

After these adjustments, Multi-Flow Adaptation is activated with the additional control function “Multi-Flow Adaptation mixer”.

11.6 Adjustment – Manual operation

All control modes, which are selected via the setting assistant, can be overridden with the functions of manual operation OFF, MIN, MAX, MANUAL.



DANGER

The pump can start despite the “OFF” function

The “OFF” function is not a safety function and is no replacement for disconnecting the power supply for maintenance work. Functions such as pump kick can start up the pump despite the “OFF” function being set.

- Always disconnect the pump from the power supply before carrying out any work!

Manual operation functions can be selected in the menu “Settings” → “Manual operation”
“Manual operation (OFF, MIN, MAX, MANUAL)”

Function	Description
Control mode	Pump works according to the set controls.
OFF	Pump is switched off. Pump is not running. All other set controls will be overridden.
MIN	The pump is set to minimum power. All other set controls are overridden.
MAX	The pump is set to maximum power. All other set controls are overridden.
MANUAL	Pump is working according to set control, which is meant for the “MANUAL” function.

Table 31: Functions of manual operation

The manual operation functions OFF, MAX, MIN, MANUAL correspond to the functions Ext. OFF, Ext. MAX, Ext. MIN and Ext. MANUAL in their effect.
Ext. OFF, Ext. MAX, Ext. MIN and Ext. MANUAL can be triggered via the digital inputs or via a bus system.

Priorities

Priority*	Function
1	OFF, External OFF (binary input), External OFF (bus system)
2	MAX, External MAX (binary input), External MAX (bus system)
3	MIN, External MIN (binary input), External MIN (bus system)
4	MANUAL, External MANUAL (binary input)

Table 32: Priorities

* Priority 1 = highest priority



NOTICE

The “MANUAL” function replaces all functions including those which are controlled via a bus system.

If a monitored bus communication fails, the control mode set via the “MANUAL” function is activated (Bus Command Timer).

Adjustable control modes for the MANUAL function:

Control mode
MANUAL – Differential pressure Δp-v
MANUAL – Differential pressure Δp-c
MANUAL – Volume flow Q-const
MANUAL – Speed n-const

Table 33: Control modes MANUAL function

12 Double pump operation

12.1 Dual pump management

All Stratos GIGA2.0 pumps are equipped with an integrated dual pump management.

In the “Twin-head pump operation” menu, a twin-head pump connection can be established or disconnected. The twin-head pump function can also be set here.

The dual pump management has the following functions:

- **Main/standby operation:**
  Each of the two pumps provides the configured flow rate. The other pump is available in case of malfunction or runs after pump cycling.
  Only one pump runs at a time (factory setting).
  The main/standby operation is also completely active even for two similar single pumps in a twin-head pump installation in the Y-piece.
- **Efficiency-optimised peak-load operation (parallel operation):**
  In peak-load operation (parallel operation), the hydraulic output is provided jointly by both pumps.
  In the partial load range, the hydraulic output is initially provided by just one of the two pumps.
  If the sum of the electrical power consumption P1 of both pumps in the partial load range is less than the power consumption P1 of one pump, then the second pump is switched on with optimised efficiency.
  This operating mode optimises operational efficiency compared to conventional peak-load operation (exclusively load-sensitive switching on and off).
  If only one pump is available, the remaining pump takes over the supply. The possible peak load is limited due to the power of the single pump. Parallel operation is also possible with two single pumps of the same type in twin-head pump operation in the Y-piece.
- **Pump cycling:**
  The actively operated pump is regularly changed automatically to guarantee even usage of both pumps in the event of single pump operation. If only one pump (main/standby, peak load or night setback) is running, the pump being operated is changed after a running time of 24 h at the latest. Both pumps run at the time of pump changeover so that operation is not interrupted. The operated pump can be replaced at least every 1 hour and can be set in length increments up to a maximum of 36 hours.



NOTICE

The remaining time until the next pump cycling is recorded via a timer. The timer stops if there is a mains interruption. After switching the mains voltage on again, the remaining time until the next pump cycling continues to run.
The count does not start again from scratch!

- **SSM/ESM (collective fault signal/individual fault signal):**
  - The **SSM function** must preferably be connected to the main pump. The SSM contact can be configured as follows:
    the contact reacts either only in the event of a fault or in the event of a fault and a warning.
    Factory setting SSM only reacts in the event of a fault.
    Alternatively or additionally, the SSM function can also be activated on the standby pump. Both contacts work in parallel.
  - **ESM:** The ESM function of the twin-head pump can be configured on each head of the twin-head pump head as follows: The ESM function on the SSM contact only signals faults of the respective pump (individual fault signal). In order to record all faults of the two pumps, both contacts must be assigned.
- **SBM/EBM (collective run signal/individual run signal):**
  - The **SBM contact** can be assigned to any of the two pumps. The following configuration is possible:
    The contact is activated when the motor is in operation, power supply is present or no fault is present.
    Factory setting: ready for operation. Both contacts signal the operating status of the twin-head pump in parallel (collective run signal).

  - **EBM:** The EBM function of the twin-head pump can be configured as follows:
    The SBM contacts only signal run signals of the respective pump (individual run signal). In order to record run signals of both the pumps, both contacts must be assigned.
- **Communication between pumps:**
  Communication for a twin-head pump has been set at the factory.
  Wilo Net must be installed with a cable between the pumps when connecting two single pumps of the same type to a twin-head pump.
  Then set the termination as well as the Wilo Net address in the menu under “Settings/external interfaces/Wilo Net setting”. Then configure the settings “Connecting twin-head pump” in the “Settings” menu, sub-menu “Twin-head pump operation”.

NOTICE

For the installation of two single pumps to form a twin-head pump, see sections “Twin-head pump installation/Y-pipe installation” [▶ 34], “Electrical connection” [▶ 35] and “Application and function of the Wilo Net interface” [▶ 92].

12.2 Twin-head pump behaviour

The control of both pumps starts from the main pump to which the differential pressure sensor is connected.

In case of **breakdown/fault/communication interruption**, the main pump alone takes over complete operation. The main pump runs as a single pump according to the set operating modes of the twin-head pump.

The standby pump that does not receive data from a sensor (differential pressure sensor, temperature sensor or Wilo Net) in the control modes (Dynamic Adapt plus, Δp-v, Δp-c, temperature control, Multi-Flow Adaptation and Q-const.) runs at an adjustable constant emergency operation speed in the following cases:

- The main pump to which the differential pressure sensor is connected fails.
- The communication between the main pump and the standby pump is interrupted.

The standby pump starts immediately after detecting a fault.

With the n-const. control mode, there is no adjustable emergency operation. In this case, the standby pump runs at the last known speed both in main/standby operation and in parallel operation.

12.3 Settings menu – Twin-head pump operation

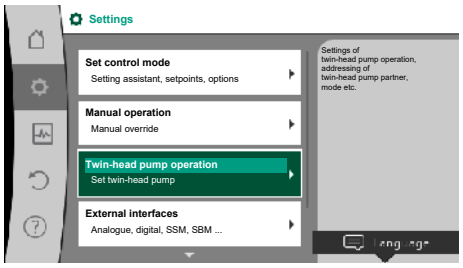

Fig. 64: Menu Twin-head pump operation

In the “Twin-head pump operation” menu, a twin-head pump connection can be established or disconnected and the twin-head pump function can also be adjusted.

In the “Settings” menu ⚙, select

1. Select twin-head pump operation.

Menu “Twin-head pump function”

When a twin-head pump connection is established, the “Twin-head pump function” menu is used to switch between

- **Main/standby operation** and
- **Efficiency-optimised peak-load operation (parallel operation)**

.

NOTICE

When switching between main/standby operation and parallel operation, different parameters of the pump are fundamentally changed. The pump is then started automatically.

Menu “Pump cycling interval”

If a twin-head pump connection is established, the time interval can be set in the “Pump cycling interval” menu. Time interval: between 1 h and 36 h, factory setting: 24 h.

An immediate pump cycling can be triggered via the menu item “manual pump cycling”. Manual pump cycling can always be carried out regardless of the configuration of the time-based pump cycling function.

Menu “Connecting twin-head pump”

If twin-head pump connection is not yet established, in the “Settings” menu , select

1. “Twin-head pump operation”
2. “Connecting twin-head pump”.

NOTICE

The pump from which the twin-head pump connection is started is the main pump. Always select the pump to which the differential pressure sensor is connected as the main pump.

When the Wilo Net connection is established (see “Wilo Net [▶ 92]” section), a list of available and appropriate twin-head pump partners will appear under “Connecting twin-head pump”.
Appropriate twin-head pump partners are pumps of the same type.

When the twin-head pump partner is selected, the display of this twin-head pump partner is switched on (Focus mode). In addition, the blue LED will flash to identify the pump.

NOTICE

Activating the twin-head pump connection fundamentally changes various parameters of the pump. The pump is then started automatically.

NOTICE

If there is an error in the twin-head pump connection, the partner address must be reconfigured! Always check the partner addresses beforehand!

Menu “Disconnect twin-head pump”

When a twin-head pump function is established, it can also be separated. Select “Disconnect twin-head pump” in the menu.

NOTICE

Disconnecting the twin-head pump function fundamentally changes various parameters of the pump. The pump is then started automatically.

Menu “Types of DP housing”

The selection of the hydraulic position at which the motor head is installed takes place independent of a twin-head pump connection.

The following selection is available in the “Types of DP housing” menu:

- Single pump hydraulic
- Twin-head pump hydraulics I (left in the direction of flow)
- Twin-head pump hydraulics II (right in the direction of flow)

With an existing twin-head pump connection, the second motor head automatically accepts the complementary setting.

- When the variant “Twin-head pump hydraulic I” is selected, the other motor head automatically adjusts to “Twin-head pump hydraulic II”.
- When the variant “Single pump hydraulic” is selected, the other motor head automatically adjusts to “Single pump hydraulic”.

NOTICE

The configuration of the hydraulics must be carried out before establishing the twin-head pump connection. With twin-head pumps delivered from the factory, the hydraulic position is pre-configured.

12.4 Display for twin-head pump operation

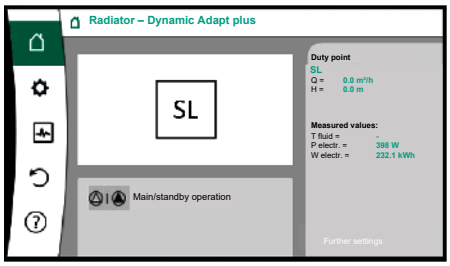

Fig. 65: Home screen en twin-head pump partner without a mounted differential pressure sensor

Each twin-head pump partner has its own graphic display, showing the values and settings. The home screen can be seen on the display of the main pump with a mounted differential pressure sensor, as with a single pump.
The feature SL is shown on the display of the partner pump without a mounted differential pressure sensor in the setpoint display field.

NOTICE

The displayed actual values shown on the display of the pump drive, which is not in operation, correspond 1:1 to the values of the active drive.

NOTICE

If a twin-head pump connection is established, entries on the graphic display of the pump partner are not possible. This can be identified by a lock symbol on the “Main menu symbol”.

Symbol of main and partner pump

The home screen shows which pump is the main pump and which is the partner pump.

- Main pump with a mounted differential pressure sensor: “Home screen” as with single pump
- Partner pump without a mounted differential pressure sensor: symbol SL in setpoint display field

Two pump symbols are displayed in twin-head pump operation in the “Active influences” area. This is what they mean:

Case 1 – main/standby operation: only the main pump is running.

Indication on the display of the main pump	Indication on the display of the partner pump
▲ I △	△ I ▲

Case 2 – main/standby operation: only the partner pump is running.

Indication on the display of the main pump	Indication on the display of the partner pump
△ I ▲	▲ I △

Case 3 – parallel operation: only the main pump is running.

Indication on the display of the main pump	Indication on the display of the partner pump
▲ + △	△ + ▲

Case 4 – parallel operation: only the partner pump is running.

Indication on the display of the main pump	Indication on the display of the partner pump
△ + ▲	▲ + △

Case 5 – parallel operation: only the main pump and partner pump are running.

Indication on the display of the main pump	Indication on the display of the partner pump
▲ + ▲	▲ + ▲

Case 6 – Main/standby or parallel operation: No pump running.

Indication on the display of the main pump	Indication on the display of the partner pump
⏃+⏃	⏃+⏃

Active influences of the pump status on the display in the home screen for twin-head pumps

The active influences are listed from highest to lowest priority.
The symbols shown for the two pumps in twin-head pump mode mean:

- The left symbol represents the pump being viewed.
- The right-hand symbol represents the partner pump.

Name	Displayed symbols	Description
Main/standby operation: Error on partner pump OFF	⏃ I ⚠	Twin-head pump is set in main/standby operation. This pump head is **inactive** due to: • Control mode • Error at the pump partner.
Main/standby operation: Error at the partner pump	▲ I ⚠	Twin-head pump is set in main/standby operation. This pump head is **active** due to a fault at the pump partner.
Main/standby operation: OFF	⏃ I ⏃	Twin-head pump is set in main/standby operation. Both pumps are **inactive** in control mode.
Main/standby operation: This pump head is active	▲ I ⏃	Twin-head pump is set in main/standby operation. This pump head is **active** in control mode.
Main/standby operation: Partner pump active	⏃ I ▲	Twin-head pump is set in main/standby operation. The pump partner is **active** in control mode.
Parallel operation: OFF	⏃+⏃	Twin-head pump is set in parallel operation. Both pumps are **inactive** in control mode.
Parallel operation: Parallel operation	▲+▲	Twin-head pump is set in parallel operation. Both pumps are **active** in parallel in control mode.
Parallel operation: This pump head active	▲+⏃	Twin-head pump is set in parallel operation. This pump head is **active** in control mode. The pump partner is **inactive**.
Parallel operation: Pump partner active	⏃+▲	Twin-head pump is set in parallel operation. The pump partner is **active** in control mode. This pump head is **inactive.** In the event of an error at the pump partner, this pump head will run.

Table 34: Active influences

13 Communication interfaces: Setting and function

In the “Settings” menu ⚙, select

1. “External interfaces”.

Possible selection:

External interface
▸ Function SSM relay
▸ Function SBM relay
▸ Function control input (DI1)
▸ Function control input (DI2)
▸ Function analogue input (AI1)
▸ Function analogue input (AI2)
▸ Function analogue input (AI3)
▸ Function analogue input (AI4)
▸ Setting Wilo Net
▸ Setting Bluetooth

Table 35: Selection “External interfaces”

13.1 Application and function of SSM relay

The contact of the collective fault signal (SSM, potential-free changeover contact) can be connected to a building automation system. The SSM relay can either switch on only in case of fault or for faults and warnings. The SSM relay can be used as a normally closed contact or a normally open contact.

- When the pump is without power, the NC contact is closed.
- If there is a fault, the contact at NC is open. The converter bridge to NO is closed.

In the “Settings” menu , select

1. “External interfaces”
2. “SSM relay function”.

Possible settings:

Selection option	Function SSM relay
Only fault (factory setting)	SSM relay connects only in case of fault. Fault means: The pump is not running.
Faults and warnings	SSM relay connects only in case of fault or a warning.

Table 36: Function SSM relay

After confirming one of the selection options, the SSM trigger delay and SSM reset delay are entered.

Setting	Range in seconds
SSM trigger delay	0 s ... 60 s
SSM reset delay	0 s ... 60 s

Table 37: Trigger and reset delay

- Triggering of the SSM signal after occurrence of a fault or a warning is delayed.
- Resetting of the SSM signal after occurrence of a fault or a warning is delayed.

Trigger delays are used so that processes are not influenced by very short fault or warning messages.
If a fault or a warning is fixed before the end of the set time, there will be no message to SSM.
A set SSM trigger delay of 0 seconds immediately reports faults or warnings.

If an error message or warning message occurs only for a brief duration (e.g. in case of a loose contact), the reset delay prevents the SSM signal from fluttering.

NOTICE

SSM trigger and SSM reset delay is set to 5 seconds as a factory setting.

SSM/ESM (collective fault signal/individual fault signal) in twin-head pump operation

- **SSM** The SSM function must preferably be connected to the main pump.
  The SSM contact can be configured as follows: the contact reacts either only in the event of a fault or in the event of a fault and a warning.
  Factory setting: SSM only reacts in the event of a fault.
  Alternatively or additionally, the SSM function can also be activated on the standby pump. Both contacts work in parallel.

- **ESM** The ESM function of the twin-head pump can be configured on each twin-head pump head as follows:
  The ESM function on the SSM contact only signals faults of the respective pump (individual fault signal). In order to detect all faults of the two pumps, the contacts must be assigned in both drives.

13.2 Application and function of SBM relay

The contact of the collective run signal (SBM, potential-free changeover contact) can be connected to a building automation system. The SBM contact signals the operating status of the pump.

- The SBM contact can be assigned to any of the two pumps. The following configuration is possible:
  The contact is activated when the motor is in operation, power supply is present (network-ready) or no fault is present (ready for operation).
  Factory setting: ready for operation. Both contacts signal the operating status of the twin-head pump in parallel (collective run signal).
  Depending on the configuration, the contact is set to NO or NC.

In the “Settings” menu , select

1. “External interfaces”
2. “SBM relay function”.

Possible settings:

Selection option	Function SSM relay
Motor in operation (factory setting)	SBM relay connects only when motor is running. Closed relay: The pump is supplying.
Power supply ready	SBM relay connects for power supply. Closed relay: Voltage available.
Ready for operation	SBM relay connects when there is no fault. Closed relay: Pump can supply.

Table 38: Function SBM relay

NOTICE

If SBM is set to “Motor in operation”, the SBM relay switches when No-Flow Stop is active.
If SBM is set to “Ready for operation”, the SBM relay does not switch when No-Flow Stop is active.

After confirming one of the selection options, the SBM trigger delay and SBM reset delay are entered.

Setting	Range in seconds
SBM trigger delay	0 s ... 60 s
SBM reset delay	0 s ... 60 s

Table 39: Trigger and reset delay

- Triggering of the SBM signal after changing an operating status is delayed.
- Resetting of the SBM signal after changing the operating status is delayed.

Trigger delays are used so that processes are not influenced by very brief changes in the operating state.
If an operating state change can be reversed before the end of the set time, the change is

not reported to the SBM.
A set SBM trigger delay of 0 seconds reports an operating state change immediately.

When an operating status change occurs only for a short duration, the reset delay prevents a flutter of the SBM signal.

NOTICE

SBM trigger and SBM reset delay is set to 5 seconds as a factory setting.

SBM/EBM (collective run signal/individual run signal) in twin-head pump operation

- **SBM:** The SBM contact can be assigned to any of the two pumps. Both contacts signal the operating status of the twin-head pump in parallel (collective run signal).
- **EBM:** The EBM function of the twin-head pump can be configured so that the SBM contacts signal only operational messages of the respective pump (individual run signal). In order to record run signals of both the pumps, both contacts must be assigned.

13.3 SSM/SBM relay forced control

An SSM/SBM relay forced control is used as function test of the SSM/SBM relay and electrical connections.

In the “Diagnostics and measured values” menu , select

1. “Diagnostics help”
2. “SSM relay forced control” or “SBM relay forced control” in sequence.

Selection options:

SSM/SBM relay Forced control	Help text
Normal	**SSM:** Depending on the SSM configuration, fault and warnings influence the SSM relay switching status. **SBM:** Depending on the SBM configuration, the pump status influences the SBM relay switching status.
Forced active	SSM/SBM relay switching status is forced ACTIVE. **CAUTION:** **SSM/SBM does not display the pump status!**
Forced inactive	SSM/SBM relay switching status is forced INACTIVE. **CAUTION:** **SSM/SBM does not display the pump status!**

Table 40: Selection option SSM/SBM relay forced control

The “Forced active” setting permanently activates the relay. A warning/operating note (light) is permanently displayed/indicated.
The “Forced inactive” setting leaves the relay permanently without a signal. No warning/operating note can be confirmed.

13.4 Application and function of the digital control inputs DI1 and DI2

The pump can be controlled through external potential-free contacts at the digital inputs DI1 and DI2. The pump can be

- switched on or switched off,
- controlled to maximum or minimum speed,
- set manually into an operating mode,
- protected against changes of settings through control or remote control or
- switched between heating and cooling.

For a detailed description of the OFF, MAX, MIN and MANUAL functions, see “Settings menu – Manual operation” [▶ 72] section.

In the “Settings” menu , select

1. “External interfaces”
2. select “Function control input DI1” or “Function control input DI2”.

Possible settings:

Selection option	Function control input DI1 or DI2
Not used	The control input does not have a function.
External OFF	**Contact open:** Pump is switched off. **Contact closed:** Pump is switched on.
External MAX	**Contact open:** Pump is running in the mode set on the pump. **Contact closed:** Pump is running with maximum speed.
External MIN	**Contact open:** Pump is running in the mode set on the pump. **Contact closed:** Pump is running with minimum speed.
External MANUAL[1)]	**Contact open:** Pump is running in the mode set on the pump or in mode requested via bus communication. **Contact closed:** Pump is set to MANUAL.
External key lock [2)]	**Contact open:** Key lock is deactivated. **Contact closed:** Key lock is activated.
Heating/cooling switchover[3)]	**Contact open:** “Heating” active. **Contact closed:** “Cooling” active.

Table 41: Function control input DI1 or DI2

[1)]Function: see “Settings menu – Manual operation” [▶ 72] section.

[2)]Function: see “Key lock ON” [▶ 95] section.

[3)]To guarantee the heating/cooling switchover function operates correctly at the digital input:

1. go to ⚙ “Settings” menu, “Set control mode”, “Setting assistant” and select the “Heating & cooling” application **and**
2. go to ⚙ “Settings” menu, “Set control mode”, “Heating/cooling switchover” and select the “Binary input” option as switchover criterion.

Procedure with EXT. OFF for twin-head pumps

The function EXT. OFF always behaves as follows:

- EXT. OFF active: contact is open, pump is stopped (OFF).
- EXT. OFF inactive: contact is closed, pump runs in normal operation (ON).
- Main pump: Twin-head pump partner with connected differential pressure sensor
- Partner pump: Twin-head pump partner without connected differential pressure sensor

The configuration of the control inputs has three possible modes for EXT. OFF which can influence the behaviour of the two twin-head pump partners.

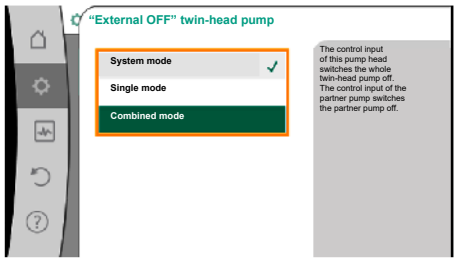

Fig. 66: Selectable modes for EXT. OFF with twin-head pumps

System mode

The control input of the main pump is occupied with a control cable and configured to EXT. OFF.
The control input on the **main pump switches both twin-head pump partners**.
The **control input of the partner pump** is ignored and **has no significance** regardless of its configuration. If the main pump malfunctions or if the twin-head pump connection is disconnected, the partner pump is also stopped.

States	Main pump			Partner pump		
	EXT. OFF	Behaviour of the pump motor	Display text for active influences	EXT. OFF	Behaviour of the pump motor	Display text for active influences
1	Active	Off	OFF Override OFF (DI1/2)	Active	Off	OFF Override OFF (DI1/2)

States	Main pump			Partner pump		
	EXT. OFF	Behaviour of the pump motor	Display text for active influences	EXT. OFF	Behaviour of the pump motor	Display text for active influences
2	Not active	On	OK; normal operation	Active	On	OK; normal operation
3	Active	Off	OFF Override OFF (DI1/2)	Not active	Off	OFF Override OFF (DI1/2)
4	Not active	On	OK; normal operation	Not active	On	OK; normal operation

Table 42: System mode

Single mode

The control input of the main pump and the control input of the partner pump are respectively occupied with a control cable and configured to EXT. OFF. **Each of the two pumps is individually switched by its own control input.** If the main pump malfunctions or if the twin-head pump connection is disconnected, the control input of the partner pump is assessed. Alternatively, a cable jumper can also be put on the partner pump instead of a separate control cable.

States	Main pump			Partner pump		
	EXT. OFF	Behaviour of the pump motor	Display text for active influences	EXT. OFF	Behaviour of the pump motor	Display text for active influences
1	Active	Off	OFF Override OFF (DI1/2)	Active	Off	OFF Override OFF (DI1/2)
2	Not active	On	OK; normal operation	Active	Off	OFF Override OFF (DI1/2)
3	Active	Off	OFF Override OFF (DI1/2)	Not active	On	OK; normal operation
4	Not active	On	OK; normal operation	Not active	On	OK; normal operation

Table 43: Single mode

Combined mode

The control input of the main pump and the control input of the partner pump are respectively occupied with a control cable and configured to EXT. OFF. **The control input of the main pump switches both twin-head pump partners off. The control input of the partner pump only switches the partner pump off.** If the main pump malfunctions or if the twin-head pump connection is disconnected, the control input of the partner pump is assessed.

States	Main pump			Partner pump		
	EXT. OFF	Behaviour of the pump motor	Display text for active influences	EXT. OFF	Behaviour of the pump motor	Display text for active influences
1	Active	Off	OFF Override OFF (DI1/2)	Active	Off	OFF Override OFF (DI1/2)
2	Not active	On	OK; normal operation	Active	Off	OFF Override OFF (DI1/2)
3	Active	Off	OFF Override OFF (DI1/2)	Not active	Off	OFF Override OFF (DI1/2)

States	Main pump			Partner pump		
	EXT. OFF	Behaviour of the pump motor	Display text for active influences	EXT. OFF	Behaviour of the pump motor	Display text for active influences
4	Not act-ive	On	OK; normal operation	Not act-ive	On	OK; normal operation

Table 44: Combined mode

NOTICE

During regular operation, it is preferable to switch the pump on or off via the DI1 or DI2 digital input with EXT. OFF rather than via the mains voltage!

NOTICE

The 24 V DC power supply is only available when the analogue input AI1 ... AI4 has been configured to a type of use and a signal type or when the digital input DI1 has been configured.

Override function priorities

Priority*	Function
1	OFF, External OFF (binary input), External OFF (bus system)
2	MAX, External MAX (binary input), External MAX (bus system)
3	MIN, External MIN (binary input), External MIN (bus system)
4	MANUAL, External MANUAL (binary input)

Table 45: Override function priorities

* Priority 1 = highest priority

Key lock priorities

Priority*	Function
1	Key lock: digital input active
2	Key lock active via menu and buttons
3	Key lock: not active

Table 46: Key lock priorities

* Priority 1 = highest priority

Priorities for heating/cooling switchover using binary input

Priority*	Function
1	Cooling
2	Heating

Table 47: Priorities for heating/cooling switchover using binary input

* Priority 1 = highest priority

13.5 Application and function of the analogue inputs AI1 ... AI4

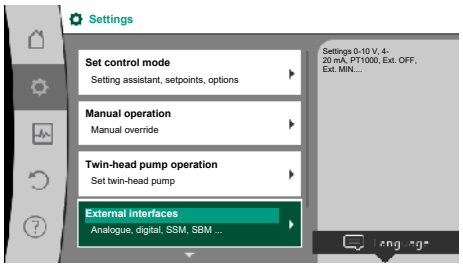

Fig. 67: External interfaces

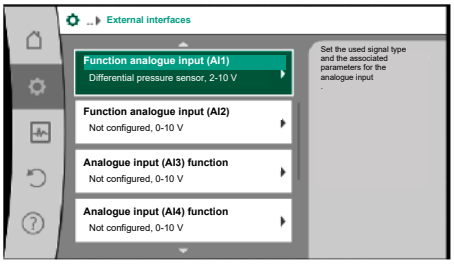

Fig. 68: Function analogue input

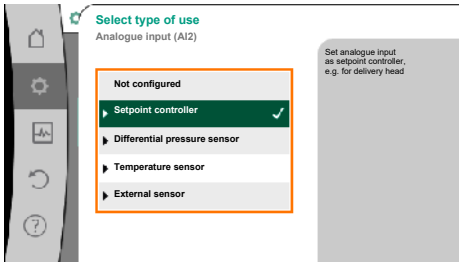

Fig. 69: Settings dialogue setpoint sensor

Analogue inputs can be used for setpoint input or actual value input. The allocation of setpoint and actual value specifications is freely configurable.

Use the menus “Analogue input AI1 function” ... “Analogue input AI4 function” to set the type of use (setpoint sensor, differential pressure sensor, external sensor, etc.), the signal type (0 ... 10 V, 0 ... 20 mA, etc.) and the corresponding signal/value assignments. In addition, information about the current settings can be queried.

The analogue input is pre-defined for the required signal depending on the selected control mode of the pump.

In the “Settings” menu , select

1. “External interfaces”
2. “Function analogue input AI1” ... “Function analogue input AI2”.

NOTICE

The differential pressure sensor of the Stratos GIGA2.0-I/-D is pre-configured to 2 ... 10 V at the factory.
For the Stratos GIGA2.0-I/-D ... R1, no analogue input is configured at the factory.

Example: setting an external setpoint sensor for Δp-v

After selecting one of the options “Analogue input (AI1) function” ... “Analogue input (AI4) function”, select the following query or setting:

Setting	Function control input AI1 ... AI4
Overview of the analogue input	Overview of settings of this analogue input, for example: • Type of use: Setpoint sensor • Signal type: 2 ... 10 V
Set analogue input.	Adjustment of type of use, signal type and corresponding signal/value assignment

Table 48: Setting analogue input AI1 ... AI4

Information about the current settings can be retrieved in “Overview of the analogue input”.

The type of use, signal type and signal/values assignment are defined in “Set analogue input”.

Type of use	Function
Not configured	This analogue input is not used. No settings required
Setpoint sensor	Use analogue input as setpoint sensor. For example, delivery head.
Differential pressure sensor	Use analogue input as actual value input for differential pressure sensor. For example, index circuit evaluator.
Temperature sensor	Use analogue input as actual value input for temperature sensor. For example for control mode T-const
External sensor	Use analogue input as actual value input for PID control.

Table 49: Types of use

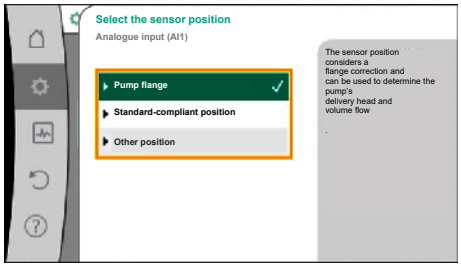

Fig. 70: Select the sensor position

The following sensor positions can be selected:

- **Pump flange:** Differential pressure measuring points are located at the drilled holes on the pump flanges of the pump on the pressure and suction side. This sensor position takes a flange correction into account.
- **Standard-compliant position:** Differential pressure measuring points are located in the piping upstream and downstream of the pump on the pressure and suction side at a distance from the pump. This sensor position **does not** take a flange correction into account.
- **Other position:** Intended for the index circuit evaluator at a remote point in the system. An additional differential pressure sensor for determining the delivery head and volume flow of the pump can be connected to the pump flange or in a position that conforms to the standard. This sensor position **does not** take a flange correction into account.

The following signal types are available depending on the type of use:

Type of use	Signal type
Setpoint sensor	• 0 … 10 V, 2 … 10 V • 0 … 20 mA, 4 … 20 mA
Differential pressure sensor	• 0 … 10 V, 2 … 10 V • 0 … 20 mA, 4 … 20 mA
Temperature sensors	• PT1000 (only for AI3 and AI4) • 0 … 10 V, 2 … 10 V • 0 … 20 mA, 4 … 20 mA
External sensor	• 0 … 10 V, 2 … 10 V • 0 … 20 mA, 4 … 20 mA

Table 50: Signal types

Example setpoint sensor

The following signal types are available for the type of use “Setpoint sensor”:

Setpoint sensor signal types:

0 … 10 V: voltage range of 0 … 10 V for transfer of setpoints.

2 … 10 V: voltage range of 2 … 10 V for transfer of setpoints. Cable break is detected for a voltage below 2 V.

0 … 20 mA: electric current range of 0 … 20 mA for transfer of setpoints.

4 … 20 mA: electric current range of 4 … 20 mA for transfer of setpoints. Cable break is detected for a electric current below 4 mA.

NOTICE

The substitute setpoint is adjusted in the event of cable break detection.

For the signal types “0 … 10 V” and “0 … 20 mA”, a cable break detection with a parameterisable threshold can be optionally activated (see setpoint sensor configuration).

Setpoint sensor configuration

NOTICE

When an external signal is used at the analogue input as setpoint source, the setpoint value must be paired to the analogue signal.
Open the editor’s context menu for the affected setpoint for coupling.

24 V D power supply at the analogue input

NOTICE

The 24 V DC power supply is only available once the analogue input AI1, AI2, AI3 or AI4 has been configured for a type of use and a signal type.

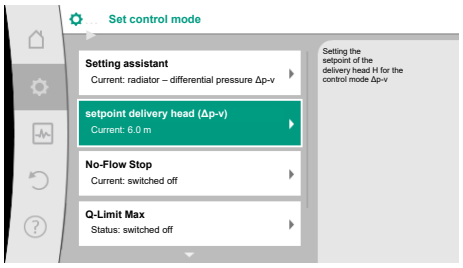

Fig. 71: Setpoint editor

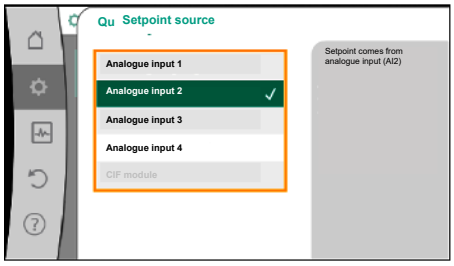

Fig. 72: Setpoint source

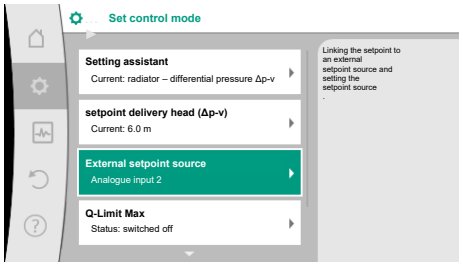

Fig. 73: External setpoint source

The use of an external signal at the analogue input as setpoint source requires coupling of the setpoint value to the analogue signal:

In the “Settings” menu , select

1. “Set control mode”.
   Depending on the selected control mode, the setpoint editor displays the adjusted set-point (setpoint delivery head Δp-v, setpoint temperature T-c,...).
2. Select setpoint and confirm by pressing the operating button.
3. Press context button and select “Setpoint of external source:”.

Selection of possible setpoint sources:

NOTICE

When an analogue input is selected as setpoint source, but the type of use for example has been selected as “Not configured” or as actual value in-put, the pump displays a configuration warning.

The deviation type is accepted as setpoint.

Either another source must be selected or the source must be configured as setpoint source.

NOTICE

After selecting one of the external sources, the setpoint is paired to this external source and can no longer be adjusted in the setpoint editor or on the home screen.
This coupling can only be cancelled in the context menu of the setpoint editor (as described above) or in the “External setpoint sensor” menu. The setpoint source must be adjusted again to “Internal setpoint”.

The coupling between external source and setpoint is marked both in the home screen, and in the setpoint editor in **blue**. The status LED also becomes blue.

After selecting one of the external sources, the “External setpoint source” menu is available to configure the parameters of the external source.

For this purpose, go to the “Settings” menu and select:

1. “Set control mode”
2. “External setpoint source”

Possible selection:

Set input for external setpoint
Select setpoint source
Set setpoint source
Substitute setpoint in the event of a cable break

Table 51: Set input for external setpoint

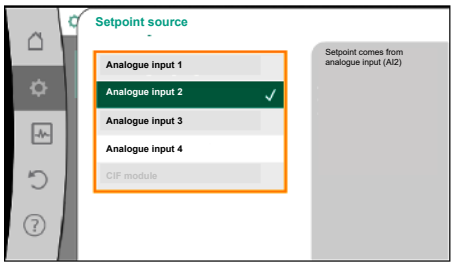

Fig. 74: Setpoint source

The setpoint source can be changed in select “Setpoint source”.

The setpoint source should be configured when an analogue input is used as source. To do this, select “Set setpoint source”.

Set input for external setpoint
Select setpoint source
Set setpoint source
Substitute setpoint in the event of a cable break

Table 52: Set input for external setpoint

Possible selection of type of use to be adjusted:

Select “Setpoint sensor” as setpoint source.

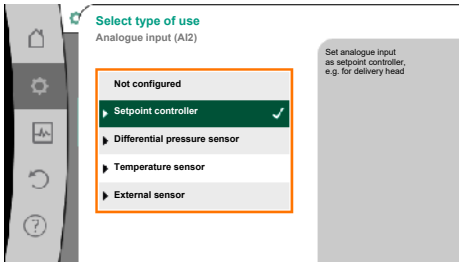

Fig. 75: Settings dialogue

NOTICE

If another type of use has been set to “Not configured” in the “Select type of use” menu, check whether the analogue input is already used for another type of use.
If necessary, select a different source.

Select the “Signal type” after selecting the type of use:

After selecting the signal type, it is defined how standard values are used:

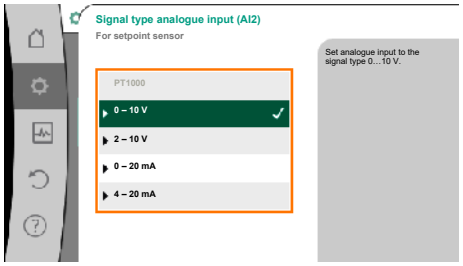

Fig. 76: Signal type

Defined standards for the transfer of the signal are used with “Use specifications”. Finally the setting of the analogue input is ended as setpoint sensor.

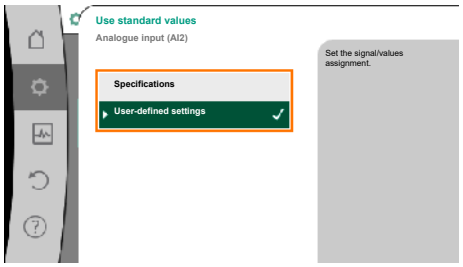

Fig. 77: Use standard values

OFF:	1.0 V
ON:	2.0
Min:	3.0 V
Max:	10.0 V

Table 53: Standard signal assignment

With the selection of “User-defined settings”, additional settings must be made:
For the signal types “0 ... 10 V” and “0 ... 20 mA”, a cable break detection with a parameterisable threshold can be optionally activated.

Select “Switched off” to switch off cable break detection.
The behaviour of the analogue input is in line with the threshold of the signal standard assignment.
Select “Switched on” to activate cable break detection only below an adjustable limit value.

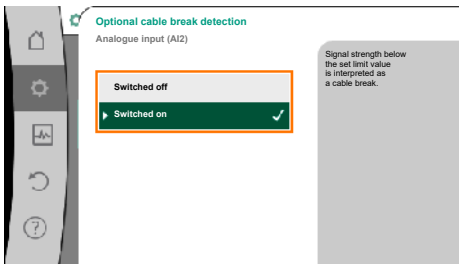

Fig. 78: Optional cable break detection

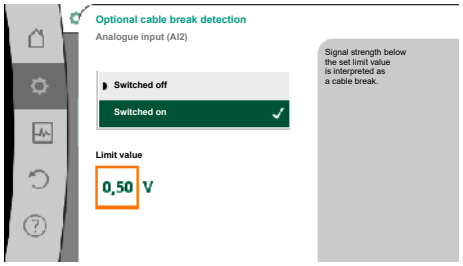

Fig. 79: Cable break limit value

Define limit value for cable break by turning the operating button and confirm by pressing it.

In the next step define whether

- the analogue signal only changes the setpoint
- and the pump is additionally switched off through the analogue signal.

A setpoint change can be done through analogue signals without switching on and off the pump through the signals. In this case, “Switched off” is selected.
If the “On/off by analogue signal” function is switched on, the limit values must be defined for the switch on/off.
Subsequently assign the MIN signal/value and MAX signal/value.

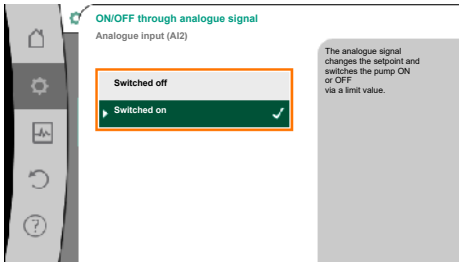

Fig. 80: On/off through analogue signal

For the transfer of analogue signal values to setpoints, only the transfer ramp is now defined. For this purpose, the minimum and maximum support points of the characteristic curve are specified and the respective setpoints are amended (MIN signal/value assignment and MAX signal/value assignment).

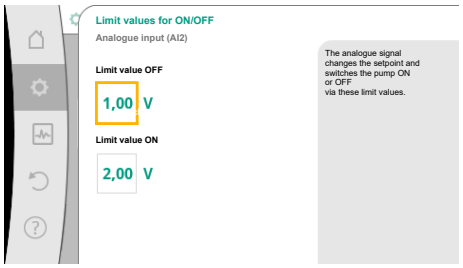

Fig. 81: Limit values for ON/OFF control through analogue signal

The value for the minimum signal describes the lower signal value of the transmission ramp with an associated value of 0 %. In this example, the lower signal value is 3 V.

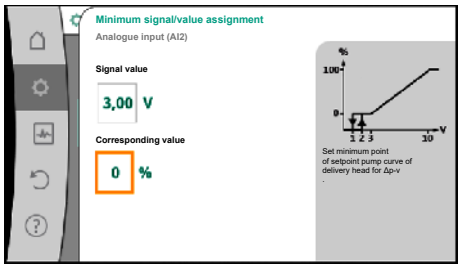

Fig. 82: Minimum signal/value assignment

The value for the maximum signal describes the upper signal value of the transmission ramp with an associated value of 100 %. In this example, the upper signal value is 10 V.

When all signal/value assignments have been performed, the setting of the analogue set-point source is completed.

An editor for adjusting the substitute setpoint in the event of a cable break or wrong config-uration of the analogue input will open.

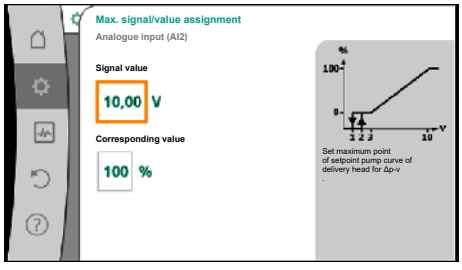

Fig. 83: Max. signal/value assignment

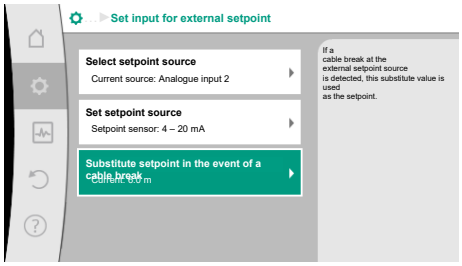

Fig. 84: Substitute setpoint in the event of a cable break

Select substitute setpoint. This setpoint is used when detecting a cable break at the external setpoint source.

Actual value sensor

The actual value sensor provides:

- Temperature sensor values for temperature-dependent control modes:
  - Constant temperature
  - Differential temperature
  - Room temperature
- Temperature sensors values for temperature-dependent additional functions:
  - Heating/cooling quantity measurement
  - Automatic heating/cooling switchover
- Differential pressure sensor values for:
  - Differential pressure control with index circuit actual value logging
- User-defined sensor values for:
  - PID control

Possible signal types when selecting the analogue input as actual value input:

Actual value sensor signal types:

0 ... 10 V: voltage range of 0 ... 10 V for transfer of measurement values.

2 ... 10 V: voltage range of 2 ... 10 V for the transfer of measurement values. Cable break is detected for a voltage below 2 V.

0 ... 20 mA: electric current range of 0 ... 20 mA for transfer of measured values.

4 ... 20 mA: electric current range of 4 ... 20 mA for transfer of measured values. A cable break is detected in case of electric current below 4 mA.

PT1000: The analogue input evaluates a PT1000 temperature sensor.

Actual value sensor configuration

NOTICE

The selection of the analogue input as a connection for a sensor requires the corresponding configuration of the analogue input.

First open the overview menu to view the current configuration and use of analogue input.

To do this, in the “Settings” menu ⚙, select

1. “External interfaces”
2. “Function analogue input AI1” ... “Function analogue input AI4”
3. “Overview of the analogue input”.

Type of use, signal type and other set values for selected analogue input will be displayed. In order to make or change settings:

In the “Settings” menu ⚙, select

1. “External interfaces”
2. “Function analogue input AI1” ... “Function analogue input AI4”
3. “Set analogue input”.

First select type of use:

Select one of the types of use “Differential pressure sensor”, “Temperature sensor” or “External sensor” as one of the usage types.

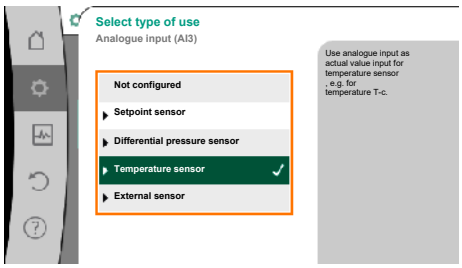

Fig. 85: Settings dialogue actual value sensor

NOTICE

If another usage type has been set to “Not configured” in the “Select type of use” menu, check whether the analogue input is already used for another type of use.
If necessary, select a different source.

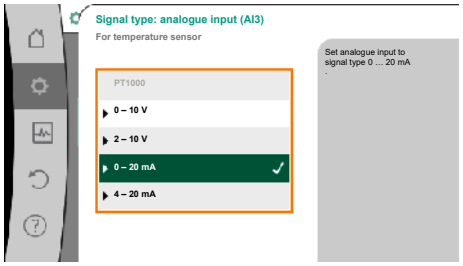

Fig. 86: Signal type

Select the “Signal type” after selecting the actual value sensor:

When selecting the signal type “PT1000”, all settings for the sensor input are completed and all other signal types require additional settings.

For the transfer of analogue signal values to actual values, only the transfer ramp is now defined. For this purpose, the minimum and maximum support point of the characteristic curve is specified and the respective actual values are amended (MIN signal/value assignment and MAX signal/value assignment).

NOTICE

If the analogue input is configured to the signal type PT1000 for a temperature sensor, a “temperature correction value” can be set to compensate for the electrical resistance if the sensor cable is longer than 3 m.

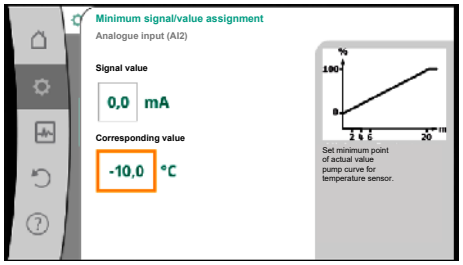

Fig. 87: Minimum signal/value assignment, actual value sensor

The value for the minimum signal describes the lower signal value of the transmission ramp with an associated value of 0 %. This is the equivalent of 0.0 mA for –10 °C in this example.

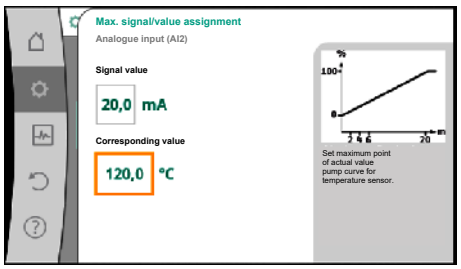

Fig. 88: Maximum signal/value assignment, actual value sensor

Data input is complete once the minimum and maximum characteristic curve support points have been entered.

The value for the maximum signal describes the upper signal value of the transmission ramp with an associated value of 100 %. This is the equivalent of 20.0 mA for 120 °C in this example.

NOTICE

If the signal type PT1000 has been selected, it’s possible to set a temperature correction value for the measured temperature. With this the electrical resistance of a long sensor cable can be compensated.

In the “Settings” menu , select

1. “External interfaces”
2. “Function analogue input AI1” ... “Function analogue input AI4”
3. “Temperature correction” and set correction value (offset).

NOTICE

Optionally specify the position of the sensor for better understanding of the connected sensor’s function.
This configured position does not influence the function or sensor use.

In the “Settings” menu , select

1. “External interfaces”
2. “Function analogue input AI1” ... “Function analogue input AI4”
3. “Select the sensor position”.

The following positions are available:

- Analogue input 1
- Analogue input 2
- Analogue input 3
- Analogue input 4

- BMS (Building management systems)
- Feed
- Return
- Primary circuit 1
- Primary circuit 2
- Secondary circuit 1
- Secondary circuit 2
- Accumulator
- Hall

13.6 Application and function of the Wilo Net interface

Wilo Net is a bus system which enables up to **21** Wilo products (participants) to communicate with one another. The Wilo-Smart Gateway is one of these participants.

Application for:

- twin-head pumps consisting of two participants
- Multi-Flow Adaptation (feeder pump connected to secondary pumps)
- remote access via Wilo-Smart Gateway

Bus topology:

The bus topology consists of multiple participants (pumps and Wilo-Smart Gateway), which are switched on in sequence. The participants are connected via a shared cable.
The bus must be terminated at both ends of the cable. This is done for the two external pumps in the pump menu. All other subscribers should **not** have activated termination.

All bus subscribers must be assigned an individual address (Wilo Net ID).
This address is set in the pump menu of the respective pump.

To terminate the pumps:

In the “Settings” menu , select

1. “External interfaces”
2. “Wilo Net setting”
3. “Wilo Net termination”.

Possible selection:

Wilo Net termination	Description
Switched on	Terminating resistor of the pump is switched on. If the pump is connected at the end of the electrical bus line, “Switched on” must be selected.
Switched off	The pump’s terminating resistor is switched off. If the pump is NOT connected at the end of the electrical bus line, “Switched off” must be selected.

After termination is done, an individual Wilo Net address is assigned to the pumps:

In the “Settings” menu , select

1. “External interfaces”
2. “Wilo Net setting”
3. “Wilo Net address” and assign each pump its own address (1 … 21).

Twin-head pump example:

- Pump head left (I)
  - Wilo Net termination: ON
  - Wilo Net address: 1
- Pump head right (II)
  - Wilo Net termination: ON
  - Wilo Net address: 2

Example with Multi-Flow Adaptation featuring four pumps:

- Primary pump
  - Wilo Net termination: ON
  - Wilo Net address: 1
- Pump secondary 1:
  - Wilo Net termination: OFF

  - Wilo Net address: 2
- Pump secondary 2:
  - Wilo Net termination: OFF
  - Wilo Net address: 3
- Pump secondary 3:
  - Wilo Net termination: ON
  - Wilo Net address: 4

NOTICE

If a Multi-Flow Adaptation system is made up of twin-head pumps, this means a maximum of 5 twin-head pumps can communicate with each other via Wilo Net in the MFA network. In addition to this maximum of 5 twin-head pumps, up to 10 additional single pumps can be included in the network.

NOTICE

It is mandatory that the twin-head pump as primary pump or twin-head pumps as secondary pumps in the Multi-Flow Adaptation network must first be configured in this way. Only then should all the settings for Multi-Flow Adaptation be adjusted in the display.

Other examples

The primary pump of a Multi-Flow Adaptation system is a twin-head pump and the whole system should be able to be remotely monitored via a gateway.

- Primary twin-head pump = 2 participants (e.g. ID 1 and ID 2)
- Wilo-Smart Gateway = 1 participant (e.g. ID 21)

A maximum of 18 pumps remain on the secondary side in the MFA system (ID 3 ... 20).
In the Wilo Net settings, the Wilo Net ID address space of 1 ... 126 is displayed as adjustable.
However, only the ID address space of 1 ... 21 is available for a functioning Wilo Net connection between pumps and accessories. A maximum of 21 participants can therefore communicate in Wilo Net.
Higher IDs mean that Wilo Net participants with higher IDs cannot communicate correctly with the other participants.

The smallest Wilo Net “communication network” consists of two participants (e.g. with twin-head pumps or two single pumps as twin-head pump). Usually the participants are then operated with ID 1 and ID 2. However, any other combination of IDs 1 ... 21 is possible as long as both IDs are different.

13.7 Setting the Bluetooth interface Wilo-Smart Connect module BT

As soon as the Wilo-Smart Connect Module BT is plugged into the Wilo-Connectivity interface, the “Settings – External interfaces – Bluetooth setting” menu appears on the display.

The following settings are possible (Fig. 89):

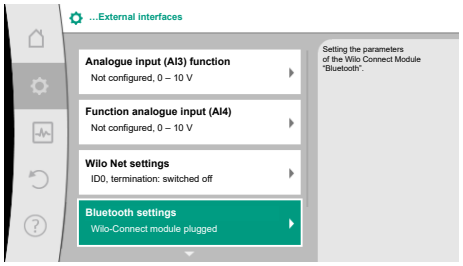

Fig. 89: Bluetooth interface setting

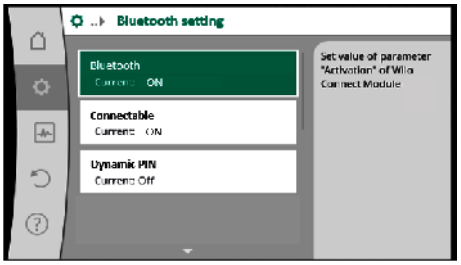

Fig. 90: Bluetooth interface

- Bluetooth: The Bluetooth signal of the Wilo-Smart Connect Module BT can be switched on and off.
- Connectable: It is permitted to establish a Bluetooth connection between the pump and a mobile end device with Wilo-Smart Connect app (ON).
  It is not permitted to establish a Bluetooth connection between the pump and a mobile end device with Wilo-Smart Connect app (OFF).
- Dynamic PIN: When a connection to the pump is established with a mobile end device using the Wilo-Smart Connect app, a PIN appears in the display. This PIN must be entered into the app to establish a connection.

Two PINs are available for selection via “Dynamic PIN”:

- OFF: Each time a connection is established, the last four digits of the S/N serial number of the Wilo-Smart Connect Module BT are shown in the display. The S/N number is printed on the rating plate of the Wilo-Smart Connect Module BT. This is called a “static PIN”.
- ON: A new PIN is always dynamically generated and shown in the display each time a connection is established.

If the menu item “Bluetooth setting” does not appear even though the Wilo-Smart Connect Module BT is plugged in, check the LED display on the module. Analyse the fault using the user manual for the Wilo-Smart Connect Module BT.

NOTICE

The menu “Bluetooth setting” only appears in English.

13.8 Application and function of CIF module

Depending on the inserted CIF module type, an associated settings menu is displayed in the menu:

“Settings”

1. “External interfaces” displayed.

The respective settings are described in the display and in the CIF module documentation.

14 Device settings

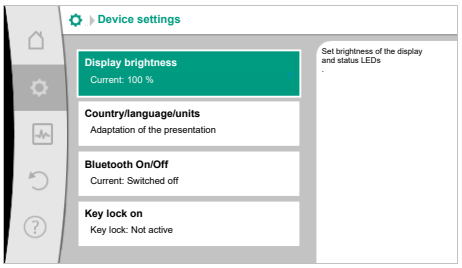

Fig. 91: Device settings

General settings are made under “Settings”, “Device settings”.

- Display brightness
- Country/language/units
- Bluetooth On/Off
  (This setting item only appears if the Wilo-Smart Connect Module BT is plugged in.)
- Key lock ON
- Device information
- Pump kick

14.1 Display brightness

Under “Settings”

1. “Device settings”
2. “Display brightness”
   the display brightness can be changed. The level of brightness is shown in a percentage. 100 % brightness corresponds to maximum possible, 5 % is the minimum possible brightness.

14.2 Country, language, units

Under “Settings”

1. “Device settings”
2. “Country, language, units”
   you can set

- Country
- language and
- units for physical values.

Select the country and configure the default setting of the language, physical units and define the correct contact data for calling local customer service in the help menu. Choose from over 60 countries and 26 languages.

Selection options of units:

Units	Description
m, m^3/h	Representation of physical values in SI units. **Exception:** • Volume flow in m^3/h • Delivery head in m
kPa, m^3/h	Display of the delivery head in kPa and the volume flow in m^3/h
kPa, l/s	Representation of delivery head in kPa and volume flow in l/s
ft, USGPM	Representation of physical values in US units

Table 54: Units

NOTICE

The units are factory set to m, m^3/h.

14.3 Bluetooth On/Off

Under “Settings”

1. “Device settings”
2. “Bluetooth On/Off”
   you can switch Bluetooth on or off. When Bluetooth is switched on, the pump can connect to other Bluetooth devices (e.g. Smartphone with Wilo-Assistant app and the Smart Connect feature it has).

NOTICE

When the Wilo-Smart Connect Module BT is plugged in, Bluetooth is switched on.

14.4 Key lock on

The key lock function prevents accidental change of pump parameters by unauthorised persons.

Under “Settings”

1. “Device settings”
2. “Key lock On”
   you can activate the key lock.

Simultaneous pressing (> 5 seconds) of back and context button deactivates the key lock.

NOTICE

You can also lock the keys using the digital inputs DI 1 and DI 2 (see section “Application and function of the digital control inputs DI1 and DI2” [▶ 81]).
If the key lock was activated through digital inputs DI1 or DI2, the deactivation can be done only through the digital inputs! A button combination is not possible!

The home screen and warning as well as error messages are also displayed when the key lock is active so you can monitor the pump status.

A lock symbol on the home screen indicates an activated key lock.

14.5 Device information

Under “Settings”

1. “Device settings”
2. “Device information”
   you can read information about product names, the product and serial number as well as software and hardware version.

14.6 Pump kick

In order to prevent blocking of the pump, a pump kick is set on the pump. After a set time interval, the pump starts and switches off after a short time.

Prerequisite:

for the pump kick function, the mains voltage must not be interrupted.

CAUTION

Blockage of the pump due to long downtimes!

Long downtimes may lead to blockage of the pump. Do not deactivate pump kick!

Pumps switched off through remote operation, bus command, control input External OFF or 0 ... 10 V signal run for a short time. This prevents blockage after long downtimes.

In the “Settings” menu , select

1. “Device settings”
2. “Pump kick”

- The time interval for the pump kick can be set between 2 and 72 hours (factory setting: 24 h).
- The pump kick can be switched on and off.

NOTICE

When it is planned to switch off the mains voltage for a longer period of time, the pump kick must be performed using an external control by switching on the mains voltage briefly.

For this purpose, the pump must be switched on by the controller before the power supply is interrupted.

15 Diagnostics and measured values

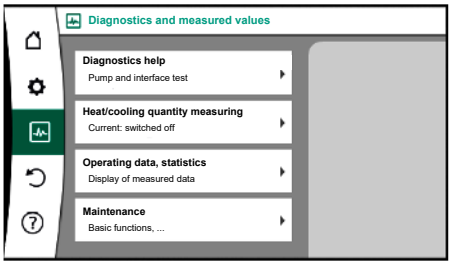

Fig. 92: Diagnostics and measured values

In order to support fault analysis, the pump provides additional help apart from fault notifications:

Diagnostics help is used for diagnosis and maintenance of electronics and interfaces. Apart from hydraulic and electrical overviews, information about interfaces, device information and manufacturer’s contact data are provided.

15.1 Diagnostics help

In the “Diagnostics and measured values” menu , select

1. “Diagnostics help”.

Functions for diagnosing and maintaining electronics and interfaces can be found under the “Diagnostics help” menu.

- Overview of hydraulic data
- Overview of electrical data
- Overview of the analogue inputs AI1 ... AI4
- SSM/SBM forced control (see also “Communication stations: settings and function” section [▶ 78])

- Device information (e.g. version of hardware and software, pump type, pump name, serial number)
- Contact data of WILO SE

15.2 Heating/cooling quantity measurement

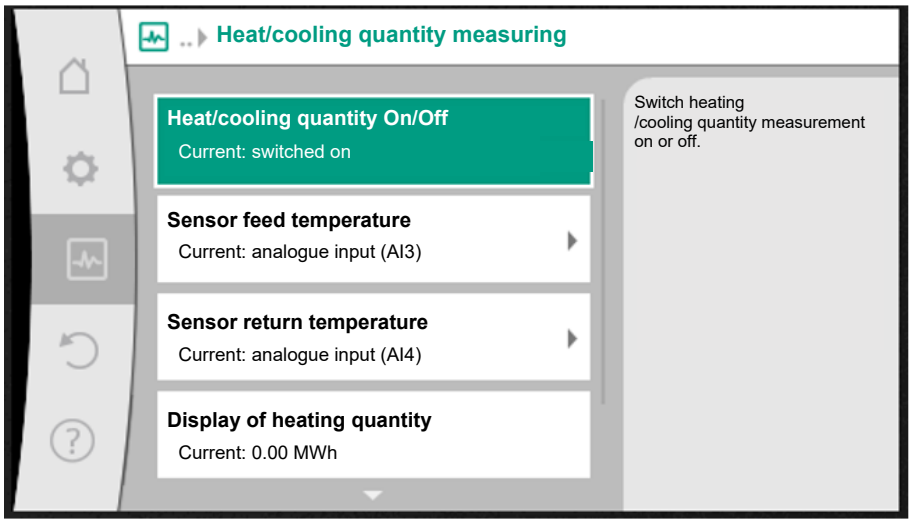

Fig. 93: Heating/cooling quantity measurement

The heating or cooling quantity is recorded by the pump's volume flow detection and checking the temperature in the feed and return.

For detecting the temperature, two temperature sensors must be connected to the pump via the analogue inputs. They must be installed in the flow and return.

The heating and cooling quantity is identified separately based on the application.

NOTICE

With Stratos GIGA2.0, the differential pressure sensor is configured to AI1 at the factory for determining the volume flow.
With Stratos GIGA2.0 ... R1, a differential pressure sensor must be mounted and configured.

Activating heating/cooling quantity measurement

In the "Diagnostics and measured values" menu, select

1. "Heating/cooling quantity measurement"
2. Select "Heating/cooling quantity On/Off".

Then configure the sensor source and sensor position in the "Sensor feed temperature" and "Sensor return temperature" menu items.

Configuring the sensor source in the feed

In the "Diagnostics and measured values" menu, select

1. "Heating/cooling quantity measurement"
2. "Sensor feed temperature"
3. Select "Select sensor source".

Configuring the sensor source in the return

In the "Diagnostics and measured values" menu, select

1. "Heating/cooling quantity measurement"
2. "Sensor return temperature"
3. Select "Select sensor source".

Potential sensor source options

- Analogue input AI1 (assigned with differential pressure sensor)
- Analogue input AI2 (only active sensor)
- Analogue input AI3 (PT1000 or active sensor)

- Analogue input AI4 (PT1000 or active sensor)
- CIF module

Configuring the sensor position in the feed

1. "Heating/cooling quantity measurement"
2. "Sensor feed temperature"
3. Select "Select sensor position".

Select "Feed" or "Return" as the sensor positions.

Configuring the sensor position in the return

1. "Heating/cooling quantity measurement"
2. "Sensor return temperature"
3. Select "Select sensor position".

Select "Feed" or "Return" as the sensor positions.

Potential sensor position options

- Analogue input AI2 (only active sensor)
- Analogue input AI3 (PT1000 or active sensor)
- Analogue input AI4 (PT1000 or active sensor)
- BMS (Building management systems)
- Feed
- Return
- Primary circuit 1
- Primary circuit 2
- Secondary circuit 1
- Secondary circuit 2
- Hall

NOTICE

When the heating or cooling quantity measurement is activated, this menu can be used to read the total overall heating or cooling quantity. The current heating and cooling capacity is displayed. If desired, the heating quantity can be re-set to 0 here.

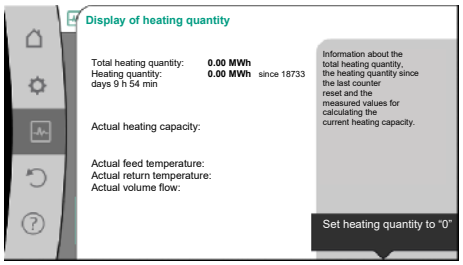

Fig. 94: Display of heating quantity

NOTICE

The energy measurement for heating or cooling can be conducted without an additional energy meter. The measurement can be used for the internal distribution of heating and cooling costs or for system monitoring. As the heating and cooling quantity measurement is not calibrated, it cannot be used as the basis for billing.

NOTICE

For constant recording of the heating/cooling quantity without interrupting data recording, the pump must only be switched on/off via a digital input with EXT. OFF. There is no data recording when the mains voltage is switched off.

15.3 Operating data/statistics

In the “Diagnostics and measured values” menu , select

1. “Operating data, statistics”.

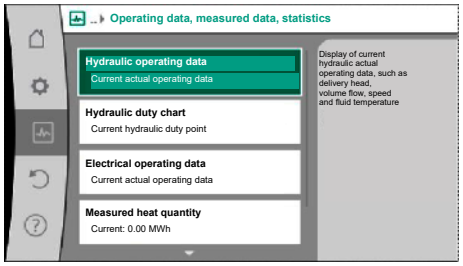

Fig. 95: Operating data, measured data, statistics

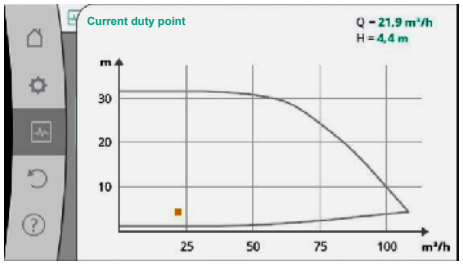

Fig. 96: Current duty point

The following operating data, measurement data and statistical data are displayed:

- Hydraulic operating data
  - Actual delivery head
  - Actual volume flow
  - Actual fluid temperature (if a temperature sensor is connected and configured)
- Hydraulic duty chart
  - Current hydraulic duty point
- Electrical operating data
  - Mains voltage
  - Power consumption
  - Total energy absorbed
  - Operating hours
- Measured heat quantity
  - Total heating quantity
  - Heat quantity since the last time the counter was re-set
  - Actual heat output
  - Actual feed temperature
  - Actual return temperature
  - Actual volume flow
- Measured cooling quantity
  - Total cooling quantity
  - Cooling quantity since the last time the counter was re-set
  - Actual cooling output
  - Actual feed temperature
  - Actual return temperature
  - Actual volume flow

Accuracy of the displayed and recorded operating data

Volume flow

The volume flow is determined with the help of the connected differential pressure sensor. The accuracy of the volume flow specification with pure water is approx. +/- 5 % of the duty point.
If a water-glycol mixture is used, the accuracy is in the range of +/-10 % ... 50 % depending on the mixing ratio.
The accuracy of the volume flow can be improved by entering known values for viscosity and density provided by the customer. The input is made via the fluid correction.

Temperature

External sensors such as PT1000 must always be connected for temperature measurement.

Accuracy information is not available here as it depends on the following factors:

- how and where temperature sensors are installed on the piping;
- which accuracy class of the sensor was selected;
- length of the sensor cable.

The accuracy within the Stratos GIGA2.0 is up to +/- 2 K depending on the temperature value.

Heating/cooling quantity measurement

The information on the heating and cooling quantity is derived from the recorded temperatures in the feed and return and from the volume flow. The accuracy of the heating and cooling quantity is subject to the accuracy of the above-described volume flow and temperature measurement. It is approx. +/- 10 % for pure water. It deviates significantly from this for water-glycol mixtures, depending on the mixing ratio.

15.4 Maintenance

In the “Diagnostics and measured values” menu , select

1. “Maintenance”.

Functions are displayed here, some of which are also listed in other settings menus. For maintenance purposes, the functions are grouped again in a menu.

- Pump kick (see also section “Device settings” [▶ 94])
- Basic functions (settings for control mode or manual operation, see also section “Settings menu – Manual operation” [▶ 72])
- MANUAL settings (see also section “Settings menu – Manual operation” [▶ 72])
- Ramp times
  - The ramp times define the maximum speed at which the pump may start up and shut down when the setpoint is changed.
- Fluid correction
  - To improve flow detection for viscous fluid (e.g. water-ethylene glycol mixtures), a fluid correction can be made. If “Switched on” is selected in the menu, the viscosity and density of the fluid can be entered in the menu item that appears. The values must be known by the customer.

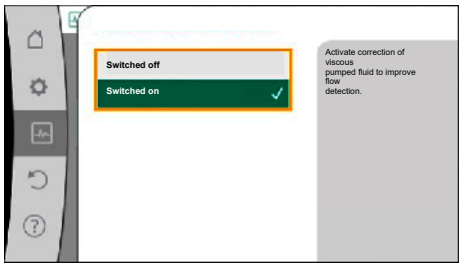

Fig. 97: Fluid correction

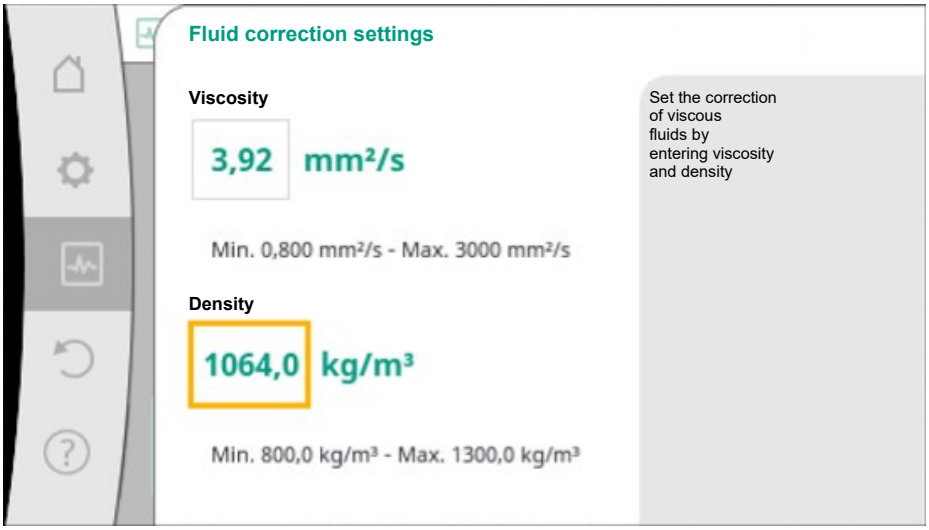

Fig. 98: Setting of the viscosity and density

- Automatic PWM frequency reduction
  - The automatic PWM frequency reduction function is available depending on type. The function is switched off in the factory.
    If the ambient temperature of the pump is too high, the pump independently reduces the hydraulic power.
    If the “Automatic PWM frequency reduction” function is activated, the switching frequency changes from a critical temperature in order to continue supplying the required hydraulic operating point.

NOTICE

A changed switching frequency can lead to higher and/or changed operating noises of the pump.

15.5 Configuration storage/data storage

The electronic module is equipped with a non-fading memory for saving the configuration. If the mains supply is interrupted for any length of time, all settings and data are retained. When power is restored, the pump continues to run with the default values that were present before the interruption.

NOTICE

The recorded operating data are stored in the data memory in a non-fading manner every 30 minutes. If the pump is switched off via the mains voltage before the 30 minutes have elapsed, the data recorded since the start of the most recent 30-minute time period are not stored. The data are then lost. It is therefore recommended to only switch off the pump via a digital input with EXT. OFF.

The Wilo-Stratos GIGA2.0 is able to record and save a range of timestamped data relating to its operating time.

- Delivery head
- Volume flow
- Speed
- Feed and return temperature
- Hall temperature (in case of hall temperature control)
- Heating and cooling quantity
- Electrical power consumption
- Voltage
- Operating hours
- History of fault and warning messages

The history data can be presented over a desired period, e.g. the last four weeks. Aspects such as the hydraulic behaviour of the hydraulic circuit being supplied or the current state of the pump can thus be analysed.
During a period without any mains voltage applied to the pump, the time stamp is set continuously with the help of a replaceable battery.

To view this data, the Wilo-Smart Connect app must be connected to the pump via Bluetooth or via Wilo Net via the Wilo-Smart Connect Gateway. The data can then be read from the pump and displayed in the app.

16 Restore and reset

Saved settings can be retrieved via restore points in the “Restore and reset” menu, but the pump can also be reset to factory settings.

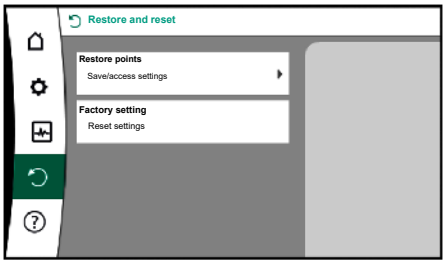

Fig. 99: Restore and reset

16.1 Restore points

When the pump has been completely configured, e.g. for commissioning, the configured settings can be saved. If there has been a change in the settings in the meantime, the saved settings can be retrieved via the restore points.

Up to three different pump settings can be saved as restore points. If required, these saved settings can be retrieved/restored via the “Restore settings” menu.

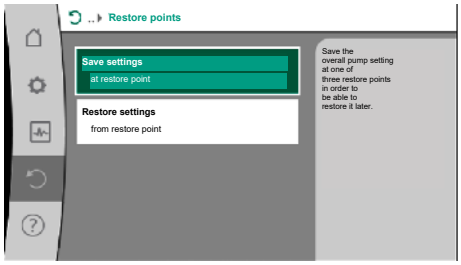

Fig. 100: Restore points – Save settings

16.2 Factory setting

The pump can be reset to factory settings.

In the “Restore and reset” menu, select

1. “Factory setting”
2. “Restore factory setting”
3. and “Confirm factory setting” one after the other.

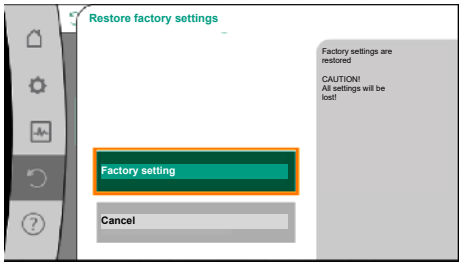

Fig. 101: Factory setting

NOTICE

Resetting pump settings to factory settings replaces the current pump settings!

Settings	Stratos GIGA2.0	Stratos GIGA2.0 ... R1
Set control mode		

Settings	Stratos GIGA2.0	Stratos GIGA2.0 ... R1
Setting assistant	Radiator – Dynamic Adapt plus	Basic control mode – n-const.
Pump On/Off	Motor on	Motor on
Twin-head pump operation		
Connecting twin-head pump	Single pump: not connected Twin-head pump: connected	Single pump: not connected Twin-head pump: connected
Twin-head pump alteration	24 h	24 h
External interfaces		
SSM relay		
Function SSM relay	Faults and warnings	Faults and warnings
Trigger delay	5 s	5 s
Reset delay	5 s	5 s
SBM relay		
Function SBM relay	Motor in operation	Motor in operation
Trigger delay	5 s	5 s
Reset delay	5 s	5 s
DI1	configured as EXT. OFF (with cable jumper)	configured as EXT. OFF (with cable jumper)
DI2	not configured	not configured
AI1	configured Type of use: differential pressure sensor Sensor position: pump flange Signal type: 4 ... 20 mA	not configured
AI2	not configured	not configured
AI3	not configured	not configured
AI4	not configured	not configured
Wilo Net		
Wilo Net termination	switched on	switched on
Wilo Net address	Twin-head pump Main pump: 1 Standby pump: 2 Single pump: 126	Twin-head pump Main pump: 1 Standby pump: 2 Single pump: 126
Device settings		
Language	English	English
Units	m, m^3/h	m, m^3/h
Pump kick	switched on	switched on
Pump kick time interval	24 h	24 h
Diagnostics and measured values		
Diagnostics help		
SSM forced control (normal, active, inactive)	inactive	inactive
SBM forced control (normal, active, inactive)	inactive	inactive
Heating/cooling quantity measurement		
Heat/cooling quantity On/Off	switched off	switched off

Settings	Stratos GIGA2.0	Stratos GIGA2.0 ... R1
Sensor feed temperature	not configured	not configured
Sensor return temperature	not configured	not configured
Maintenance		
Pump kick	switched on	switched on
Pump kick time interval	24 h	24 h
Basic function mode	Control mode	Control mode
Fluid correction	Switched off viscosity 1.002 mm^2/s density 998.2 kg/m^3	Switched off viscosity 1.002 mm^2/s density 998.2 kg/m^3
Ramp time	0 s	0 s
Automatic PWM frequency reduction	switched off	switched off

Table 55: Factory settings

17 Help

17.1 Help system

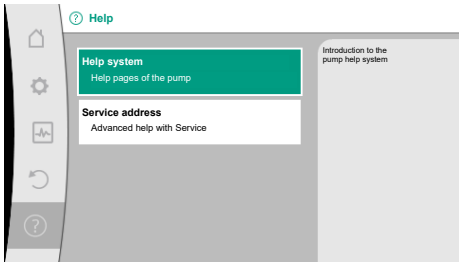

Fig. 102: Help system

In the “Help” menu

1. “Help System”

you can find a lot of basic information, which will help you to understand the product and its functions better. By pressing the context button , you can access more information about the displayed topics. Going back to the previous help page is possible at any time by pressing the context button and “back” selection.

17.2 Service contact

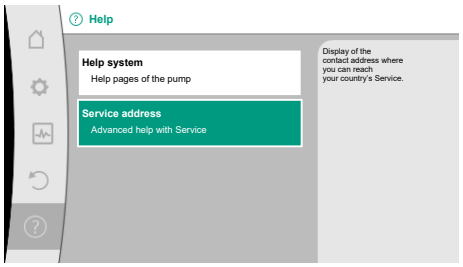

Fig. 103: Service address

For questions about the product and in case of problems, the contact details of the factory customer service can be found at

“Help”

1. “Service address”

.

The contact data is dependent on the country setting in “Country, language, units” menu. Only local addresses are mentioned for each country.

18 Faults, causes and remedies

WARNING

Have faults remedied by qualified personnel only! Observe safety instructions.

In the event of faults, fault management only provides feasible pump outputs and functionalities.
Any occurred faults are permanently checked and, if mechanically possible, emergency operation or control mode are activated.
Flawless pump operation is only resumed once the fault cause no longer applies. Example: The electronic module is again cooled down.

Configuration warnings indicate that an incomplete or wrong configuration is preventing execution of a desired function.

NOTICE

If the pump behaves incorrectly, check that the analogue and digital inputs are configured correctly.

For details, see the detailed instructions at www.wilo.com

If the malfunction cannot be rectified, consult a specialist technician or the nearest Wilo customer service or representative location.

18.1 Mechanical faults without error messages

Faults	Causes	Remedy
Pump does not start or stops working.	Cable terminal loose.	Fuse protection defect.
Pump does not start or stops working.	Fuse protection defect.	Check fuses; replace faulty fuses.
Pump runs at reduced performance.	Stop valve on the pressure side throttled.	Slowly open the stop valve.
Pump runs at reduced performance.	Air in the suction line.	Eliminate leakage at flanges. Vent pump. In case of visible leakage, replace the mechanical seal.
Pump makes noises.	Cavitation due to insufficient suction pressure.	Increase the suction pressure. Observe the minimum inlet pressure at the suction port. Check slide valve and filter on the suction side and clean if need be.
Pump makes noises.	Motor has bearing damage.	Have the pump checked by Wilo customer service or a specialised service centre and repaired if necessary.

Table 56: Mechanical faults

18.2 Diagnostics help

In order to support fault analysis, the pump provides additional help apart from fault notifications:

Diagnostics help is used for diagnosis and maintenance of electronics and interfaces. Apart from hydraulic and electrical overviews, information about interfaces, device information and manufacturer's contact data are provided.

In the "Diagnostics and measured values" menu , select

1. "Diagnostics help".

Selection options:

Diagnostics help	Description	Display
Overview of hydraulic data	Overview of current hydraulic operating data.	• Actual delivery head • Actual volume flow • Actual speed • Actual fluid temperature • Active restriction Example: max. pump characteristic curve
Overview of electrical data	Overview of current electrical operating data.	• Mains voltage • Power consumption • Consumed energy • Active restriction Example: max. pump characteristic curve • Operational hours

Diagnostics help	Description	Display
Overview of analogue input (AI1)	Overview of settings e.g. type of use differential pressure sensor, signal type 2 … 10 V	• Type of use • Signal type • Function 1)
Overview of analogue input (AI2)	e.g. type of use differential pressure sensor, signal type 4 … 20 mA for control mode index circuit evaluator Δp-c	• Type of use • Signal type • Function 1)
Overview of analogue input (AI3)	e.g. type of use temperature sensor, signal type PT1000 for control mode ΔT-const.	• Type of use • Signal type • Function 1)
Overview of analogue input (AI4)	e.g. type of use temperature sensor, signal type PT1000 for control mode ΔT-const.	• Type of use • Signal type • Function 1)
SSM relay forced control	Forced control of the SSM relay in order to check the relay and electrical connection.	• Normal • Forced active • Forced inactive 2)
SBM relay forced control	Forced control of the SBM relay, in order to check the relay and electrical connection.	• Normal • Forced active • Forced inactive 2)
Device information	Display of different device information.	• Pump type • Article number • Serial number • Software version • Hardware version
Manufacturer contact	Display of contact data of the factory customer service.	• Contact data

Table 57: Selection options – Diagnostics help

1) For information about type of use, signal type and functions, see "Application and function of the analogue inputs AI1 … AI 4" [▶ 85] section.
2) See "SSM/SBM relay forced control" [▶ 81] section.

18.3 Error messages

Displays an error message on the display

- The status display will be in red colour.
- Error message, error code (E...), cause and remedy are described as text.

The pump is not operational if an error has occurred. If the pump identifies as part of permanent monitoring that the cause of the error no longer applies, the error message is revoked and operation resumes.

If an error message is output, the display is permanently on and the green LED indicator is off.

Code	Fault	Cause	Remedy
401	Unstable power supply	Unstable power supply.	Check the electrical installation.
	Additional information about causes and remedy: Power supply too unstable. Operation cannot be maintained.		
402	Undervoltage	Power supply is too low.	Check the electrical installation.
	Additional information about causes and remedy: Operation cannot be maintained. Possible causes: 1. Mains overloaded. 2. Pump is connected to the wrong power supply.		
403	Overvoltage	Power supply is too high.	Check the electrical installation.

Code	Fault	Cause	Remedy
	Additional information about causes and remedy: Operation cannot be maintained. Possible causes: 1. Pump is connected to the wrong power supply.		
404	Pump blocked.	Mechanical influence is inhibiting the rotation of the pump shaft.	Check free movement of rotating parts in the pump head and motor. Remove deposits and foreign substances.
	Additional information on causes and remedies: In addition to deposits and foreign substances in the system, the pump shaft can also be blocked.		
405	Electronic module too hot.	Permissible temperature of the electronic module is exceeded.	Ensure permissible ambient temperature. Improve room ventilation.
	Additional information about causes and remedies: Observe the permissible installation position and minimum distance from insulation and system components to ensure sufficient ventilation. Keep cooling fins free of deposits.		
406	Motor too hot.	Permissible motor temperature is exceeded.	Ensure permissible ambient and fluid temperature. Ensure motor cooling with unobstructed air circulation.
	Additional information about causes and remedy: Adhere to permissible installation position and minimum distance from insulation and system components to ensure sufficient ventilation.		
407	Connection between motor and module interrupted.	Electrical connection between motor and module faulty.	Check the motor module connection.
	Additional information about causes and remedies: Dismantle the electronic module to check the contacts between module and motor. Observe the safety instructions!		
408	There is flow through the pump in the opposite direction of flow.	External influences cause flow through against direction of flow of the pump.	Check system function, install swing check valves if necessary.
	Additional information about causes and remedy: If flow passing through pump in the opposite direction is too strong, the motor can no longer start.		
409	Incomplete software update.	The software update was not completed.	Software update with a new software bundle is required.
	Additional information about causes and remedy: The pump can work only once the software update has been completed.		
410	Analogue / digital input overloaded.	Voltage of analogue / digital input short-circuited or too heavily loaded.	Check cable and consumers connected to power supply of analogue / digital input for short-circuit.
	Additional information about causes and remedy: The fault impairs the binary inputs. EXT. OFF is set. The pump is stationary. The power supply is the same for analogue and digital input. In case of overvoltage, both inputs are overloaded equally.		
411	No mains phase	No mains phase	Check the electrical installation.
420	Motor or electronic module defective.	Motor or electronic module defective.	Replace motor and/or electronic module.
	Additional information about causes and remedy: The pump cannot determine which of the two components is faulty. Contact service.		
421	Electronic module is defective.	Electronic module is defective.	Replace electronic module.
	Additional information about causes and remedy: Contact service.		

Table 58: Error messages

18.4 Warning messages

Warning displayed:

- The status display is marked in yellow.
- Warning message, warning code (W...), cause and remedy are described as text.

Warnings indicate restricted pump function. The pump continues to operate in restricted mode (emergency operation).
Depending on the cause of the warning, emergency operation leads to a restriction of the control function and even reactivation of a fixed speed.
If the pump identifies as part of permanent monitoring that the cause of the warning no longer applies, the warning is revoked and operation resumes.

If a warning message is output, the display is permanently on and the green LED indicator is off.

Code	Warning	Cause	Remedy
550	There is flow through the pump in the opposite direction of flow.	External influences cause flow through against direction of flow of the pump.	Check power control of the pumps, install swing check valve if needed.
	Additional information about causes and remedy: If flow passing through pump in the opposite direction is too strong, the motor can no longer start.		
551	Undervoltage	Power supply too low. Power supply has fallen below a minimum limit value.	Check power supply.
	Additional information about causes and remedy: The pump is running. Undervoltage reduces the pump's performance. If the voltage continues to drop, reduced operation cannot be maintained.		
552	There is externally generated flow through the pump in the direction of flow.	External influences cause flow through in the pump's direction of flow.	Check power control of the other pumps.
	Additional information about causes and remedy: The pump can start despite flow through.		
553	Electronic module is defective.	Electronic module is defective.	Replace electronic module.
	Additional information about causes and remedies: The pump is running, but may not be able to provide full power. Contact service.		
554	MFA[1)] pump is not reachable.	A MFA[1)] partner pump no longer reacts to requests.	Check Wilo Net connection or power supply of the partner pump.
	Additional information about causes and remedy In the MFA[1)] overview, check the pump highlighted with (!). The supply is ensured, a substitute value is assumed.		
555/ 557/ 591/ 594	Implausible sensor value at analogue input AI1, AI2, AI3 or AI4.	The configuration and the present signal lead to an unusable sensor value.	Check configuration of the input and connected sensor.
	Additional information about causes and remedy Incorrect sensor values may lead to substitute operating modes that ensure functioning of the pump without the required sensor value.		
556/ 558/ 592/ 595	Cable break at analogue input AI1, AI2, AI3 or AI4.	The configuration and the present signal help identify the cable break.	Check configuration of the input and connected sensor.
	Additional information about causes and remedy: Cable break detection may lead to substitute operating modes that ensure functioning of the pump without the required external value. With one twin-head pump: If W556 appears in the partner pump display without a differential pressure sensor connected, always check the twin-head pump connection as well. W571 is also activated. However, it is not displayed with the same priority as W556. The partner pump without a connected differential pressure sensor interprets itself as a single pump due to the missing connection to the main pump. In this case, it recognises the unconnected differential pressure sensor as a cable break.		
560	Incomplete software update.	The software update was not completed.	Software update with new software bundle is recommended.
	Additional information about causes and remedy: Software update was not carried out; pump continues to operate with previous software version.		

Code	Warning	Cause	Remedy
561	Digital input overloaded (binary).	Voltage digital input short-circuited or too heavily loaded.	Check cable and consumers connected to power supply of digital input for short-circuit.
	Additional information about causes and remedy: Binary inputs are impaired. Functions of binary inputs are not available.		
562	Analogue input overloaded (analogue).	Voltage analogue input short-circuited or too heavily loaded.	Check the cables and consumers connected to the analogue input power supply for short circuits.
	Additional information about causes and remedy: Analogue input functions impaired.		
563	Sensor value missing from BMS[2)] (building management system).	Sensor source or BMS[2)] is configured incorrectly. Communication has failed.	Check configuration and function of BMS[2)].
	Additional information about causes and remedy: Control functions impaired. A replacement function is active.		
564	Setpoint missing from BMS[2)].	Sensor source or BMS[2)] is configured incorrectly. Communication has failed.	Check configuration and function of BMS[2)].
	Additional information about causes and remedy: Control functions impaired. A replacement function is active.		
565/ 566/ 593/ 596	Signal too strong at analogue input AI1, AI2, AI3 or AI4.	The available signal is significantly over the expected maximum.	Check input signal.
	Additional information about causes and remedy: The signal is processed with the maximum value.		
569	Configuration missing.	Pump configuration is missing.	Configure pump. Software update is recommended.
	Additional information about causes and remedy: Pump operating in replacement mode.		
570	Electronic module too hot.	Permissible temperature of the electronic module is exceeded.	Ensure permissible ambient temperature. Check electronic module ventilation. Keep cooling fins free of deposits.
	Additional information about causes and remedies: The electronic module must adjust the pump's operation in the event of noticeable overheating to prevent damage to electronic components.		
571	Double pump connection interrupted.	The connection to the twin-head pump partner cannot be made.	Check power supply of the twin-head pump partner, cable connection and configuration.
	Additional information about causes and remedy: Pump function slightly impaired. The motor head meets the pump function up to the performance limit. See also additional information for code 582.		
573	Communication to display and operating unit interrupted.	Internal communication to display and operating unit interrupted.	Check ribbon cable contacts.
	Additional information about causes and remedies: The display and operating unit is connected to the pump's electronics on its rear side via a ribbon cable.		
574	Communication to CIF module interrupted.	Internal communication to the CIF module interrupted.	Check/clean contacts between CIF module and electronic module.
	Additional information about causes and remedy: The CIF module is connected to the pump in the terminal room via four contacts.		
575	Remote control not possible by radio.	The Bluetooth radio module is faulty.	Software update is recommended. Contact Service.
	Additional information about causes and remedy: Pump function not impaired. If a software update does not eliminate the issue, contact Service.		

Code	Warning	Cause	Remedy
578	Display and operating unit defective.	A fault in the display and operating unit has been identified.	Replace display and operating unit.
	Additional information about causes and remedy: The display and operating unit is available as a spare part.		
579	Software for display and operating unit incompatible.	Display and operating unit cannot communicate correctly with the pump.	Software update is recommended.
	Additional information about causes and remedy: Pump function not impaired. If a software update does not eliminate the issue, contact Service.		
580	Too many wrong PIN entries.	Too many connection attempts with wrong PIN.	Disconnect power supply from the pump and switch it on again.
	Additional information about causes and remedies: An incorrect PIN has been entered more than 5 times. For safety reasons, further connection attempts are prevented without a restart.		
582	Double pump is not compatible.	Twin-head pump partner is not compatible with this pump.	Select/install appropriate twin-head pump partner.
	Additional information about causes and remedy: Twin-head pump function is only possible with two compatible pumps of the same type. Check the compatibility of the software versions of both twin-head pump partners. Contact service.		
584	Internal fault in display and operating unit. Automatic reactivation of the display follows.		Contact service. Replace display and operating unit.
	Additional information about causes and remedies: The basic pump functions are not impacted by this fault.		
586	Overvoltage	Power supply is too high.	Check power supply.
	Additional information about causes and remedy: The pump is running. If the voltage continues to increase, the pump is shut down. Excessive voltages can damage the pump.		
587	Battery weak.	Battery power too low	Replace battery.
	Additional information about causes and remedies: If the battery power is high enough, the time information, e.g. in heat measurement and statistics, is displayed correctly. If the battery power is too low, it may not be possible to maintain time recording. This does not impair the pump function		
588	Electronic fan blocked, defective or not connected.	Electronic fan does not work.	Check the fan cable.
	Additional information about causes and remedies: The pump continues to run but may no longer be able to provide full power.		
589	Battery empty	Battery discharged	To avoid further deviations in the time recording, the battery must be replaced.
	Additional information about causes and remedies: The pump's time recording might be faulty. The time data e.g. in heat/cooling quantity measurement, restore points and statistical data may not be correct. The basic pump function is not impaired.		
590	MFA[1] partner type is not appropriate.	A MFA[1] partner does not have the appropriate type.	Check type and software of the partner pump.
	Additional information about causes and remedy: A maximum replacement volume flow is provided for the Multi-Flow Adaptation partner. Check the partners highlighted with (!) in the MFA[1] overview of the context menu.		

Table 59: Warning messages

[1] MFA = Multi-Flow Adaptation
[2] BMS = Building Management System

18.5 Configuration warnings

Configuration warnings occur if an incomplete or contradictory configuration has been made.

Example:
The “Hall temperature control” function requires a temperature sensor. The corresponding source is not specified or not correctly configured.

Code	Fault	Cause	Remedy
601	Setpoint source not suitably configured.	Setpoint is not connected to correct source. Input not suitably configured.	Configure source or select another source.
	The setpoint source is not correctly configured. In the context menu there is a link for configuring the setpoint source.		
602	Setpoint source not available.	Setpoint not connected to existing CIF module.	Insert CIF module. Activate CIF module.
	The setpoint source or the CIF module is not correctly configured. In the context menu there are links for configuration.		
603	Sensor source not suitably configured.	Sensor 1 is not connected to correct source. Input not suitably configured.	Configure source. Select other source.
	The sensor source is not correctly configured. In the context menu there is a link for configuring the sensor source.		
604	Same sensor source not possible.	Sensor sources are configured to the same source.	Configure a sensor source to another source.
	The sensor sources are not correctly configured. In the context menu there is a link for configuring the sensor sources.		
606	Sensor source not available.	Sensor value 1 is not connected to existing CIF module.	Insert CIF module. Activate CIF module.
	The sensor source or the CIF module is not correctly configured. In the context menu there are links for configuration.		
607	Sensor source not suitably configured.	Sensor 2 is not connected to correct source. Input not suitably configured.	Configure source or select another source.
	The sensor source is not correctly configured. In the context menu there is a link for configuring the sensor source.		
609	Sensor source not available.	Sensor value 2 is not connected to existing CIF module.	Insert CIF module. Activate CIF module.
	The sensor source or the CIF module is not correctly configured. In the context menu there are links for configuration.		
610	Sensor source not suitably configured.	Feed temperature sensor is not connected to correct source. Input not suitably configured.	Configure source to “temperature sensor” usage type or select another source.
	The sensor source is not correctly configured. In the context menu there is a link for configuring the sensor source.		
611	Same sensor source not possible.	Sensor sources for heat meter configured for the same source.	Configure one of the sensor sources for the heat meter to another source.
	The sensor sources are not correctly configured. In the context menu there is a link for configuring the sensor sources.		
614	Sensor source not available.	Feed temperature is not connected to existing CIF module.	Insert CIF module. Activate CIF module.
	The sensor source or the CIF module is not correctly configured. In the context menu there are links for configuration.		
615	Sensor source not suitably configured.	Return temperature sensor is not connected to correct source. Input not suitably configured.	Configure source to “temperature sensor” usage type or select another source.
	The sensor source is not correctly configured. In the context menu there is a link for configuring the sensor source.		
618	Sensor source not available.	Return temperature is not connected to existing CIF module.	Insert CIF module. Activate CIF module.
	The sensor source or the CIF module is not correctly configured. In the context menu there are links for configuration.		

Code	Fault	Cause	Remedy
619	Sensor source not suitably configured.	Temperature sensor for “Heating/cooling switchover” is not connected to the correct source. Input not suitably configured.	Configure source to “temperature sensor” usage type or select another source.
	The sensor source is not correctly configured. In the context menu there is a link for configuring the sensor source.		
621	Sensor source not available.	Temperature value for “Heating/cooling switchover” is not connected to existing CIF module.	Insert CIF module. Activate CIF module.
	The sensor source or the CIF module is not correctly configured. In the context menu there are links for configuration.		
641	Setpoint source not suitably configured.	Setpoint is not connected to correct source. Input not suitably configured.	Configure source or select another source.
	The setpoint source for the cooling function is not correctly configured. In the context menu there is a link for configuring the setpoint source.		
642	Setpoint source not available.	Setpoint not connected to existing CIF module.	Insert CIF module. Activate CIF module.
	The setpoint source for the cooling function or the CIF module is not correctly configured. In the context menu there are links for configuration.		
643	Sensor source not suitably configured.	Sensor 1 is not connected to correct source. Input not suitably configured.	Configure source. Select other source.
	The sensor source for the cooling function is not correctly configured. In the context menu there is a link for configuring the sensor source.		
644	Same sensor source not possible.	Sensor sources are configured to the same source.	Configure a sensor source to another source.
	The sensor sources for the cooling function are not correctly configured. In the context menu there is a link for configuring the sensor sources.		
646	Sensor source not available.	Sensor value is not connected to existing CIF module.	Insert CIF module. Activate CIF module.
	The sensor source or the CIF module is not correctly configured. In the context menu there are links for configuration.		
647	Sensor source not suitably configured.	Sensor 2 is not connected to correct source. Input not suitably configured.	Configure source or select another source.
	The sensor source for the cooling function is not correctly configured. In the context menu there is a link for configuring the sensor source.		
649	Sensor source not available.	Sensor value 2 is not connected to existing CIF module.	Insert CIF module. Activate CIF module.
	The sensor source or the CIF module is not correctly configured. In the context menu there are links for configuration.		
650	No MFA[1)] partner pump	MFA[1)] is selected, but no partner pump is configured.	Configuration of MFA[1)] partner pumps is required or select another control mode.
	MFA[1)] collects the requirement of configured partner pumps to supply in total. For this purpose, the partner pumps must be selected in the MFA[1)] configuration.		
651	Sensor source not suitably configured.	Differential pressure sensor connected incorrectly. Input not suitably configured	Configure “Differential pressure sensor” usage type or select another source.
	The sensor source is not correctly configured. In the context menu there is a link for configuring the sensor source.		
655	Sensor source not suitably configured.	Fluid temperature sensor incorrectly connected. Input not suitably configured.	Configure “temperature sensor” usage type or select another source.
	The sensor source is not correctly configured. In the context menu there is a link for configuring the sensor source.		
657	Delivery head/flow unknown	Delivery head and / or flow are required.	Connect the differential pressure sensor to the pump and configure it.
	The pump functions in a substitute operating mode that maintains pump operation.		

Table 60: Configuration warnings

[1)]MFA= Multi-Flow Adaptation

19 Maintenance

- Maintenance work: The technician must be familiar with the use of operating fluids and their disposal.
- Electrical work: a qualified electrician must carry out the electrical work.
- Installation/dismantling: The technician must be trained in the use of the necessary tools and fixation materials.

It is recommended to have the pump serviced and checked by the Wilo customer service.



DANGER

Risk of fatal injury due to electrical current!

Improper conduct when carrying out electrical work can lead to death due to electric shock!

- Any work on electrical devices may only be carried out by a qualified electrician.
- Before carrying out any work, disconnect the unit from the power supply and secure it against accidental switch-on.
- Any damage to the pump connection cable should only ever be rectified by a qualified electrician.
- Never poke around in the openings of the motor or electronic module or insert anything into them.
- Follow the installation and operating instructions for the pump, level control device and other accessories.
- After completing the work, refit previously dismantled protective devices, for example, covers or coupling covers.



DANGER

When dismantled, the permanent magnet rotor inside the pump can pose mortal danger for people with medical implants (e.g. pacemakers).

- Follow the general behavioural guidelines that apply to handling electrical devices!
- Do not open the motor!
- Dismantling and installation of the rotor may only be carried out by Wilo customer service! If you have been fitted with a pacemaker, you must **not** carry out this kind of work!



NOTICE

The magnets inside the motor do not pose a danger **provided the motor is completely assembled**. People with pacemakers can approach a Stratos GIGA2.0 without restriction.



WARNING

Personal injury due to strong magnetic forces!

Opening the motor leads to high, abruptly occurring magnetic forces. This can lead to serious cuts, crushing injuries and bruises.

- Do not open the motor!
- Only allow Wilo customer service to dismantle and install the motor flange and the bearing plate for maintenance and repair work!



DANGER

Risk of fatal electrical shock! Generator or turbine operation during pump flow!

Even without the electronic module (without electrical connection), there may be dangerous contact voltage at the motor contacts!

- Check for absence of voltage and cover or cordon off adjacent live parts!
- Close the shut-off devices upstream and downstream of the pump!



DANGER

Potentially fatal injury due to electronic module not being installed!

A life-threatening voltage may be present at the motor contacts! Normal operation of the pump is only permitted with the electronic module installed.

- Never connect or operate the pump without the electronic module mounted!



DANGER

Danger of death from falling parts!

The pump itself and pump parts can have a very high net weight. Falling parts pose a risk of cuts, crush injuries, bruises or impacts, which can be fatal.

- Always use suitable lifting accessories and secure parts against falling.
- Never stand below a suspended load.
- During storage and transport, as well as before all installation and assembly work, ensure that the pump is in a safe position and standing securely.



DANGER

Danger of death due to ejected tools!

The tools used during maintenance work on the motor shaft can be thrown away if they come into contact with rotating parts. Injuries and even death are possible!

- The tools used during maintenance work must be removed completely before the pump is started up!



WARNING

There is a risk of burns or freezing upon coming into contact with the pump/system.

Depending on the pump and system operating conditions (fluid temperature), the entire pump can become very hot or very cold.

- Keep a safe distance during operation!
- Allow the system and pump to cool down to room temperature!
- Always wear protective clothing, safety gloves and safety glasses when working.

19.1 Air supply

After completion of all maintenance work, reattach the fan cover with the screws provided so that the motor and the electronic module are sufficiently cooled.

Check the air supply to the motor housing and electronic module at regular intervals. Dirt impairs the cooling of the motor. If necessary, remove dirt and restore unrestricted air supply.

19.2 Maintenance work



DANGER

Danger of death from falling parts!

Falling pumps or individual pump components may result in life-threatening injuries!

- During installation work, secure pump components against falling down with suitable lifting gear.



DANGER

Risk of fatal electrical shock!

Check for absence of voltage and cover or cordon off adjacent live parts.

19.2.1 Replacing the mechanical seal

There may be a slight amount of drip leakage during the running-in period. Even during normal operation of the pump, it is normal for there to be slight leakage with the occasional formation of drops.
A regular visual inspection is required. If leakage is clearly visible, replace the gasket.
For further information, see also Wilo Consulting guide for glanded pumps.
Wilo offers a repair kit which contains the necessary parts for replacement.



NOTICE

The magnets inside the motor pose no risk to persons with pacemakers, provided that the motor is not opened and the rotor is not dismantled. The mechanical seal can be replaced without any risk.

Dismantling:



WARNING

Risk of scalding!

At high fluid temperatures and system pressures, allow the pump to cool down first and then depressurise the system.

1. Disconnect the system from the power supply and secure it against being switched on again without authorisation.
2. Close the shut-off devices upstream and downstream of the pump.
3. Make sure it is not live.
4. Earth the work area and short-circuit.
5. Loosen the screws of the electronic module (Fig. I, Item 3) and remove the upper part of the electronic module (Fig. I, Item 2).
6. Disconnect mains connection cable. If present, remove the cable of the differential pressure sensor on the electronic module or on the plug connection of the differential pressure sensor.
7. Depressurise the pump by opening the air vent valve (Fig. I, Item 28).



NOTICE

It is recommended to dismantle the module for better handling prior to dismantling the motor impeller unit (see “Replacing the electronic module” [▶ 119] section).

8. Leave two transport lugs (Fig. I, Item 30) on the motor flange.
9. Attach motor impeller unit to the transport lugs with suitable lifting equipment for protection (Fig. 6).
10. Loosen and remove the screws (Fig. I/II/III/IV, Item 29).

⇒ We recommend using two mounting bolts (accessories) instead of two screws (Fig. I/II/III/IV, Item 29). The mounting bolts are screwed diagonally to each other through the drilled hole in the lantern into the pump housing (Fig. I, Item 24). The installation bolts make it easier to avoid damaging the impeller when dismantling the motor impeller unit and then reinstalling it.

NOTICE

When attaching the lifting accessory, avoid damaging the plastic parts such as the fan wheel and module upper part.

11. Loosen the screw (Fig. I/III, Item 10, Fig. II/IV, Item 29) that holds the holder of the differential pressure sensor. Pull the differential pressure sensor (Fig. I, Item 8) with the holder to the side and suspend it from the pressure measuring lines (Fig. I, Item 7). Disconnect the connection cable of the DPS in the electronic module or loosen and remove it from the plug connection.
12. For pump type (Fig. III, IV), loosen the screws (Item 29). Use the two adjacent threaded holes (Fig. 104, Item 1) and use suitable screws provided on-site (e.g. M10 x 25 mm). Pull the motor impeller unit off the pump housing.
    For pump type (Fig. I and Fig. II), use the two threaded holes M10 (see Fig. 105) and use suitable screws provided on-site (e.g. M10 x 20 mm). The slots (Fig. 105, Item 2) can also be used for pulling off.
    For this, use two screwdrivers as a lever, for example. After pressing out by about 15 mm, the motor impeller unit is no longer guided in the pump housing.

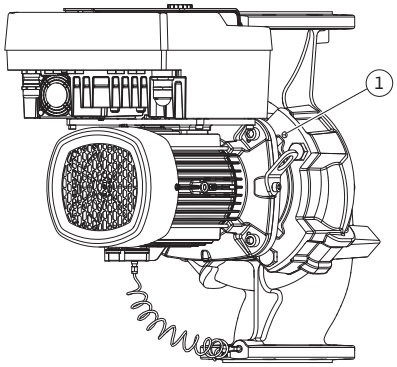

Fig. 104: Pressing off the motor impeller unit via threaded holes

NOTICE

In order to avoid tipping, the motor impeller unit may have to be supported with suitable lifting equipment. This is especially the case if no mounting bolts are used.

13. Release the two non-detachable screws from the protective plate (Fig. I and Fig. III, Item 27) and remove the protective plate.

    ⇒ **Version with plastic impeller and cone connection (Fig. I and Fig. II)**

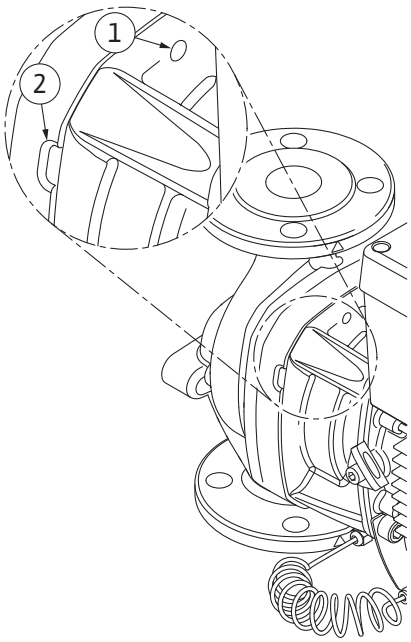

Fig. 105: Threaded holes and slots for pulling the motor impeller unit off the pump housing

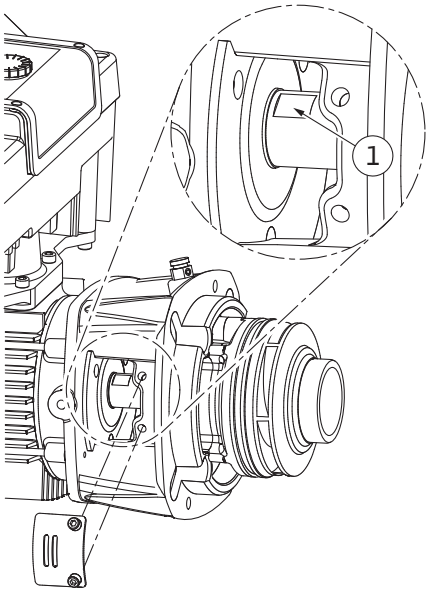

Fig. 106: Wrench flats on the shaft

14. Insert an open-end wrench (22 mm width across flats) into the lantern window and hold the shaft by the wrench flats (Fig. 106, Item 1). Unbolt the impeller nut (Fig. I, Item 22). The impeller (Fig. I, Item 21) is automatically pulled off the shaft.
15. Dismantle the shim (Fig. I, Item 20).

    ⇒ **Version with cast impeller and feather key connection (Fig. III)**
16. Loosen impeller nut (Fig. III, Item 22). Remove the conical spring washer (Fig. III, Item 23) underneath and pull the impeller (Fig. III, Item 21) off the pump shaft. Disassemble key (Fig. III, Item 37).

    ⇒ **For plastic impellers and cast impellers (Fig. I/II/III), the following applies:**
17. Depending on the pump type, loosen the screws (Fig. I and Fig. III, Item 10) and the screws (Fig. II, Item 10b) or Fig. III, Item 10a.
18. Release the lantern from the motor centring device and pull it off the shaft. The mechanical seal (Fig. I, Item 25) and spacer (Fig. I, Item 20) will also be removed at the same time. Avoid jamming the lantern.
19. Press the mechanical seal's stationary ring (Fig. I, Item 26) out of the seat in the lantern.
20. Carefully clean the seat areas on the shaft and the lantern.

    ⇒ **Version with cast impeller and feather key connection (Fig. IV)**
21. Loosen impeller nut (Fig. IV, Item 22). Remove the discs (Fig. IV, Item 23) underneath and pull the impeller (Fig. IV, Item 21) off the pump shaft. Disassemble key (Fig. IV, Item 37).
22. Remove mechanical seal (Fig. IV, Item 25) and spacer (Fig. IV, Item 20).
23. Remove the stationary ring (Fig. IV, Item 26) of the mechanical seal out of its seat in the lantern.
24. Carefully clean the seat areas on the shaft and the lantern.

Installation

NOTICE

For all the following work, observe the screw tightening torque specified for the respective thread type (“Tightening torques” [▶ 29] table)!

Elastomers (O-ring, mechanical seal bellows) are easier to install with “wetted water” (e.g. mixture of water and washing up liquid).

1. Clean the flange support and centring surfaces of the pump housing, lantern and, if necessary, the motor flange to ensure proper positioning of the parts.
2. Insert a new stationary ring in the lantern. For the version with a separate single lantern (according to Fig. I/II/III), carefully push the lantern over the shaft and position it in the old position or another desired angular position relative to the motor flange. Observe permitted installation positions of the components (see section “Permitted installation positions and change of the arrangement of components before installation” [▶ 24]).

CAUTION

Damage due to incorrect handling!

The impeller is attached with a special nut whose installation requires a particular procedure described below. If the installation instructions are not observed, there is a danger of overtightening the thread or of endangering the pumping function. The removal of damaged parts can be very difficult and result in damaging the shaft.

Apply thread paste to both impeller nut threads for every installation. The thread paste has to be suitable for stainless steels and for the permitted operating temperature of the pump, e.g. Molykote P37. Dry assembly can lead to thread seizing (cold welding) of the thread and make subsequent dismantling impossible.

⇒ **Version with plastic impeller and cone connection (Fig. I and Fig. II)**

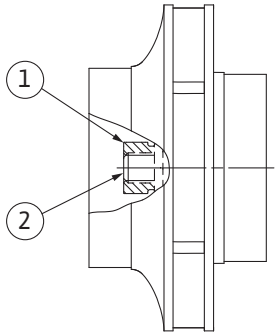

Fig. 107: Correct position of the impeller nut after installation

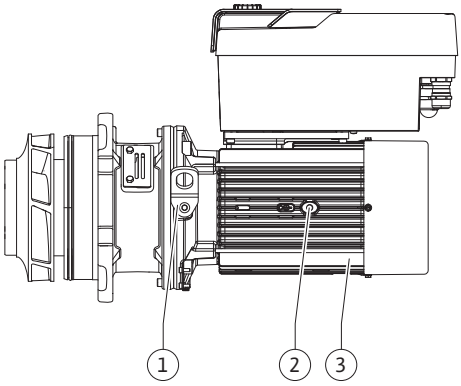

Fig. 108: Motor impeller unit

3. Insert an open-end wrench (22 mm width across flats) into the lantern window and hold the shaft by the wrench flats (Fig. 106, Item 1).
4. Screw the impeller nut into the impeller hub as far as it will go.
5. Screw the impeller together with the impeller nut hand-tight onto the shaft. Do **not** change the position achieved in the previous step. Never use a tool to tighten the impeller.
6. Hold the impeller and manually loosen the impeller nut by about two rotations.
7. Screw the impeller together with the impeller nut onto the shaft again until friction resistance increases. Do **not** change the position achieved in the previous step.
8. Hold the shaft with open-end wrench (22 mm width across flats) and tighten the impeller nut to the prescribed tightening torque (see table “Tightening torques” [▶ 29]). The nut (Fig. 107, Item 1) has to be about ±0.5 mm flush with the shaft end (Fig. 107, Item 2). If this is not the case, release the nut and repeat steps 4 – 8.
9. Remove the open-end wrench and reinstall the protective plate (Fig. I, Item 27).

   ⇒ **Version with cast impeller and feather key connection (Fig. III and Fig. IV)**
10. Insert an open-end wrench (32 mm width across flats) into the lantern window (Fig. IV, Item 38) and hold the shaft by the wrench flats (Fig. 106, Item 1). Install the impeller with washer(s) and nut. Tighten the nut. Avoid damage to the mechanical seal due to jamming.
11. Clean the lantern groove and insert the new O-ring (Fig. III, Item 19).
12. Attach motor impeller unit to the transport lugs with suitable lifting equipment for protection. When attaching, avoid damaging plastic parts such as the fan wheel and the upper part of the electronic module.

    ⇒ **For plastic impellers and cast impellers, the following applies:**
13. Insert the motor impeller unit (see Fig. 108) into the pump housing in the old or another desired angular position. Observe permitted installation positions of the components (see section “Permitted installation positions and change of the arrangement of components before installation” [▶ 24]).
14. The use of mounting bolts is recommended (see section “Accessories” [▶ 20]). Once the lantern guide has firmly engaged, (about 15 mm before the end position), there is no longer any danger of tipping or tilting. After the motor impeller unit has been secured with at least one screw (Fig. I/III, Item 10 or Fig. III/IV, Item 29), the fixation material can be removed from the transport lugs.
15. Screw in the screws (Fig. I/III, Item 10 or Fig. III/IV, Item 29) but do not tighten them all the way. The motor impeller unit is drawn into the pump housing whilst the screws are being screwed in.

CAUTION

Damage due to incorrect handling!

While screwing in the screws, check that the shaft can be turned by slightly turning the fan wheel. If the shaft is difficult to move, tighten the screws alternately and diagonally.

16. If the screws (Fig. I, Item 4) of the electronic module have been removed, screw in the screws again. Clamp the holder (Fig. I, Item 13) of the differential pressure sensor under one of the screw heads (Fig. I/III, Item 10 or Fig. II/IV, Item 29) on the side opposite the electronic module. Screw in the screws (Fig. I/III, Item 10 or Fig. III/IV, Item 29) all the way.
17. Move the transport lugs (Fig. I, Item 30) displaced in step 7 in the section “Dismantling” back from the motor housing to the motor flange.

NOTICE

Observe the commissioning measures (see section “Commissioning” [▶ 48]).

18. Re-clamp the connection cable of the differential pressure sensor/mains cable.
19. Refit the upper part of the electronic module and tighten the screws.
20. Open the shut-off devices upstream and downstream of the pump.
21. Reset the fuse.

19.2.2 Replacing the motor/drive

Increased bearing noises and unusual vibrations indicate bearing wear. The bearings or motor must then be replaced. The drive may only be replaced by the Wilo customer service!

NOTICE

In the case of the pump version shown in Fig. IV, the motor is designed with an integrated lantern, in contrast to the other versions with a separate lantern. Steps 14 ... 24 for dismantling in the “Changing the mechanical seal” chapter are not applicable here.

DANGER

Risk of fatal electrical shock! Generator or turbine operation during pump flow!

Even without the electronic module (without electrical connection), there may be dangerous contact voltage at the motor contacts!

- Check for absence of voltage and cover or cordon off adjacent live parts!
- Close the shut-off devices upstream and downstream of the pump!

WARNING

Personal injury due to strong magnetic forces!

Opening the motor leads to high, abruptly occurring magnetic forces. This can lead to serious cuts, crushing injuries and bruises.

- Do not open the motor!
- Only allow Wilo customer service to dismantle and install the motor flange and the bearing plate for maintenance and repair work!

NOTICE

The magnets inside the motor do not pose a risk to persons with pacemakers provided that the motor is not opened and the rotor is not dismantled. The motor/drive can be replaced without any risk.

Dismantling

1. Carry out steps 1 ... 21 to dismantle the motor in accordance with section “Replacing the mechanical seal”. (When lifting the single motor, the transport lugs can be moved from Fig. I, Item 14a to Item 14b).

NOTICE

If the threaded holes (Fig. II/III, Item 14b) are not present in the motor housing, it is not necessary to move the transport lugs.

2. Carry out installation steps 1 ... 21 to install the drive, see section “Replacing the mechanical seal”.

Installation

1. Clean the flange support and centring surfaces of the pump housing, lantern and motor flange to ensure proper positioning of the parts.

2. Before installing the electronic module, pull the new O-ring (Fig. I, Item 31) between the electronic module (Fig. I, Item 1) and the motor adapter (Fig. I, Item 11) onto the contacting chamber.
3. Press the electronic module into the new motor contacting and fasten with screws (Fig. I, Item 4).

NOTICE

The electronic module must be pressed on as far as possible when it is installed.

4. Carry out installation steps 1 ... 21 to install the drive, see section “Replacing the mechanical seal” [▶ 114].

19.2.3 Replacing the electronic module

NOTICE

Before ordering an electronic module as a replacement for twin-head pump operation, check the software version of the remaining twin-head pump partner.
The software of both twin-head pump partners must be compatible.
Contact service.

Always observe the section “Commissioning” before carrying out any work! Only Wilo customer service should replace the electronic module!

DANGER

Risk of fatal electrical shock! Generator or turbine operation during pump flow!

Even without the electronic module (without electrical connection), there may be dangerous contact voltage at the motor contacts!

- Check for absence of voltage and cover or cordon off adjacent live parts!
- Close the shut-off devices upstream and downstream of the pump!

NOTICE

The magnets inside the motor do not pose a risk to persons with pacemakers provided that the motor is not opened and the rotor is not dismantled. The electronic module can be replaced without any risk.

1. To dismantle the electronic module, carry out steps 1 ... 6 according to section “Replacing the mechanical seal” [▶ 114].
2. Remove the screws (Fig. I, Item 4) and remove the electronic module from the motor.
3. Replace the O-ring (Fig. I, Item 31).
4. Press the new electronic module into the motor contacting and fasten with screws (Fig. I, Item 4).

Restore the pump’s operational readiness: See section “Replacing the mechanical seal” [▶ 114]; steps 18 ... 21 in the Installation section!

NOTICE

The electronic module must be pressed on as far as possible when it is installed.

NOTICE

Disconnect the electronic module from the mains supply when performing another insulation test on site!

19.2.4 Module fan replacement

In order to replace the module fan, the electronic module must be dismantled, see section “Replacing the electronic module” [▶ 119].

Dismantling the module fan:

1. Open the cover of the electronic module (see section “Electrical connection” [▶ 35]).

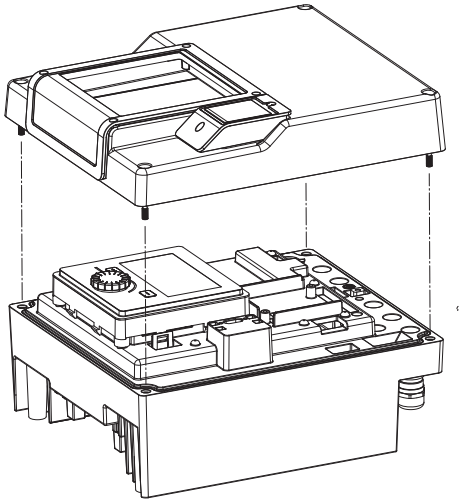

Fig. 109: Open the cover of the electronic module

2. Remove the connection cable of the module fan.

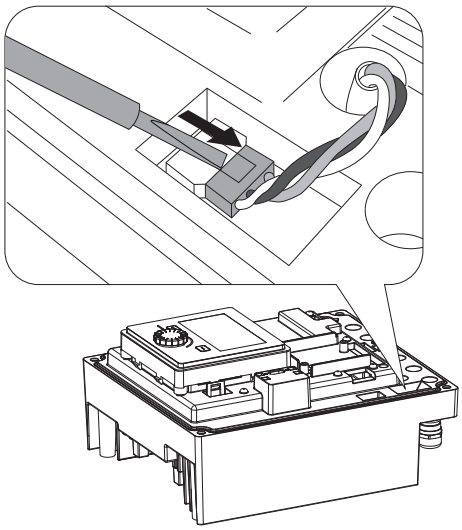

Fig. 110: Loosen the connection cable of the module fan

3. Loosen the screws of the module fan.

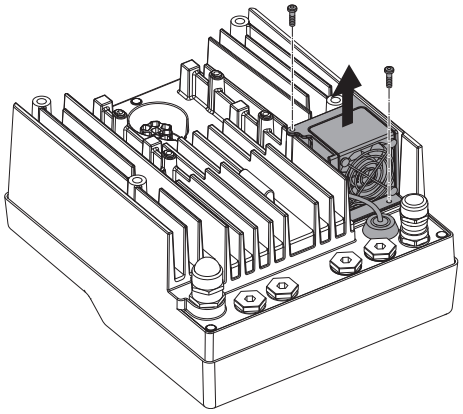

Fig. 111: Dismantling the module fan

4. Remove the module fan and loosen the cable with rubber sealing from the module lower part.

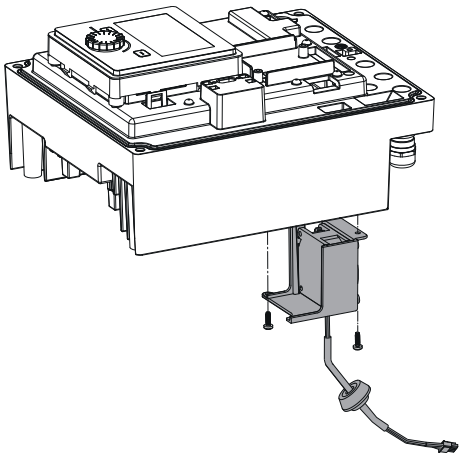

Fig. 112: Remove the module fan incl. cable and rubber sealing

Installation of the new module fan:

1. Install the new module fan in reverse order, as described above.
2. Refit the electronic module (see section “Replacing the electronic module” [▶ 119]).

19.2.5 Battery change

Before carrying out any work, disconnect the unit from the power supply and secure it against being switched back on!

The battery (button cell CR2032) is positioned under the display.

1. Remove the electronic module cover (see section “Replacing the electronic module” [▶ 119]).
2. Release the display and control unit from the locking mechanism (image) and remove the display cable.

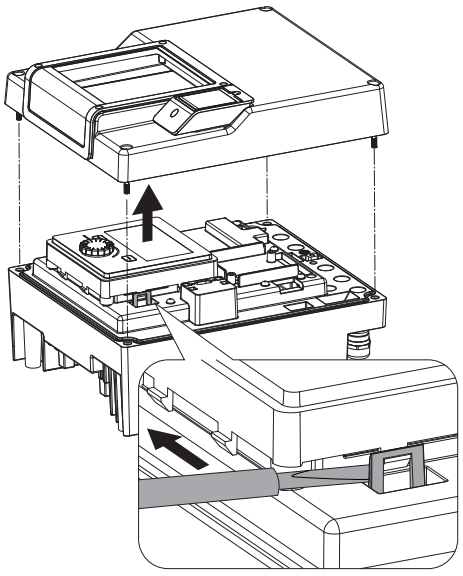

Fig. 113: Dismantle the module cover; release the display and control unit from the locking mechanism

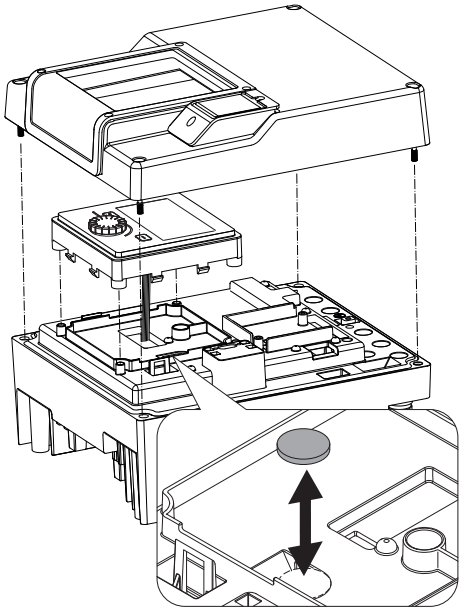

Fig. 114: Lift the display and control unit, replace the battery

3. Lift the display and control unit and replace the battery.
4. Carry out installation in reverse order.

20 Spare parts

Obtain original spare parts only from a qualified specialist or Wilo customer service. To avoid queries and order errors, please provide all pump and drive rating plate data with every order. Pump rating plate see Fig. 2, Item 1, drive rating plate see Fig. 2, Item 2.

CAUTION

Risk of material damage!

Trouble-free pump operation can only be guaranteed when original spare parts are used.

Use only original Wilo spare parts!

Information to be provided when ordering spare parts: Spare part numbers, spare part designations, all data from pump and drive rating plate. This helps prevent return queries and incorrect orders.

NOTICE

For a list of genuine spare parts, see the Wilo spare parts documentation (www.wilo.com). The item numbers of the exploded view drawing (Fig. I to IV) are for orientation and listing of pump components. These item numbers are **not** to be used for spare parts orders!

21 Disposal

21.1 Oils and lubricants

Operating fluids must be collected in suitable containers and disposed of in accordance with the locally applicable guidelines. Wipe up drips immediately!

21.2 Information on the collection of used electrical and electronic products

Proper disposal and appropriate recycling of this product prevents damage to the environment and danger to your personal health.

NOTICE

Disposal in domestic waste is prohibited!

In the European Union this symbol may be included on the product, the packaging or the accompanying documentation. It means that the electrical and electronic products in question must not be disposed of along with domestic waste.

To ensure proper handling, recycling and disposal of the used products in question, please note the following points:

- Hand over these products at designated, certified collection points only.
- Observe the locally applicable regulations!

Please consult your local municipality, the nearest waste disposal site, or the dealer who sold the product to you for information on proper disposal. See www.wilo-recycling.com for more information about recycling.

21.3 Batteries/rechargeable batteries

Batteries and rechargeable batteries must not be disposed of with domestic waste and must be removed before the device is disposed of. End consumers are legally obliged to return all used batteries and rechargeable batteries. For this purpose, you can return used batteries and rechargeable batteries free of charge at municipal collection points or specialist dealers.



NOTICE

Built-in lithium battery!

The electronic module of the Stratos GIGA2.0 contains a replaceable lithium battery. If the battery voltage is too low, the battery must be replaced. A warning appears in the pump display. Only the battery from the Wilo spare parts catalogue may be used! Further recycling information at www.wilo-recycling.com.

Subject to change without prior notice!









wilo

Pioneering for You



Local contact at
www.wilo.com/contact

WILO SE
Wilopark 1
44263 Dortmund
Germany
T +49 (0)231 4102-0
T +49 (0)231 4102-7363
wilo@wilo.com
www.wilo.com