Pioneering for You

Wilo-Yonos PICO-Z



en Installation and operating instructions

4258256 • Ed.01/2023-02





Yonos PICO-Z
https://qr.wilo.com/336

Table of contents

1 General information 4
- 1.1 About these instructions 4
- 1.2 Copyright 4
- 1.3 Subject to change 4

2 Safety 4
- 2.1 Identification of safety instructions 4
- 2.2 Personnel qualifications 5
- 2.3 Electrical work 5
- 2.4 Operator responsibilities 6

3 Description of the pump 6
- 3.1 Overview 6
- 3.2 Operating and display elements 7
- 3.3 Type key 7
- 3.4 Technical data 8
- 3.5 Control mode and functions 8

4 Application/use 8
- 4.1 Intended use 8
- 4.2 Misuse 9

5 Transportation and storage 9
- 5.1 Scope of delivery 9
- 5.2 Transport inspection 9
- 5.3 Transport and storage conditions 9

6 Installation and electrical connection 9
- 6.1 Installation 9
- 6.2 Electrical connection 11

7 Commissioning 13
- 7.1 Venting 13
- 7.2 Setting the control mode and the delivery head 13

8 Shutdown 14
- 8.1 Shutting down the pump 14

9 Maintenance 14

10 Faults, causes and remedies 14
- 10.1 Warning messages 15
- 10.2 Fault messages 15

11 Disposal 16
- 11.1 Information on the collection of used electrical and electronic products 16

1 General information

1.1 About these instructions

These instructions form part of the product. Compliance with the instructions is essential for correct handling and use:

- Read the instructions carefully before all activities.
- Keep the instructions in an accessible place at all times.
- Observe all product specifications.
- Observe the markings on the product.

The language of the original operating instructions is German. All other languages of these instructions are translations of the original operating instructions.

1.2 Copyright

WILO SE © 2023

The reproduction, distribution and utilization of this document as well as the communication of its contents to others without express authorization is prohibited. Offenders will be held liable for the payment of damages. All rights reserved.

1.3 Subject to change

Wilo shall reserve the right to change the listed data without notice and shall not be liable for technical inaccuracies and/or omissions. The illustrations used may differ from the original and are intended as an example representation of the device.

2 Safety

This chapter contains basic instructions for the individual life cycles of the product. Failure to observe this information carries the following risks:

- Danger to persons from electrical, mechanical and bacteriological effects as well as electromagnetic fields
- Environmental damage from discharge of hazardous substances
- Damage to property
- Failure of important product functions
- Failure of required maintenance and repair procedures

Failure to observe the instructions will result in the loss of any claims for damages.

The directions and safety instructions in the other sections must also be observed!

2.1 Identification of safety instructions

These installation and operating instructions set out safety instructions for preventing personal injury and damage to property, which are displayed in different ways:

- Safety instructions relating to personal injury start with a signal word and are **preceded by a corresponding symbol**.
- Safety instructions relating to property damage start with a signal word and are displayed **without** a symbol.

Signal words

- **DANGER!**
  Failure to follow the instructions will result in serious injury or death!
- **WARNING!**
  Failure to follow instructions can lead to (serious) injury!
- **CAUTION!**
  Failure to follow instructions can lead to property damage and possible total loss.

- **NOTICE!**
  Useful information on handling the product

Symbols

These instructions use the following symbols:

 General danger symbol

 Danger of electric voltage

 Warning of hot surfaces

 Warning of magnetic fields

 Notices

2.2 Personnel qualifications

Personnel must:

- Be instructed about locally applicable regulations governing accident prevention.
- Have read and understood the installation and operating instructions.

Personnel must have the following qualifications:

- Electrical work: Electrical work must be performed by a qualified electrician.
- Installation/dismantling work: The installation/dismantling must be carried out by a qualified technician who is trained in the use of the necessary tools and fixation materials.
- The product must be operated by persons who are instructed on how the complete system functions.

Definition of “qualified electrician”

A qualified electrician is a person with appropriate technical education, knowledge and experience who can identify **and** prevent electrical hazards.

2.3 Electrical work

- Electrical work must be performed by a qualified electrician.
- Nationally applicable guidelines, standards and regulations as well as specifications issued by the local energy supply companies for connection to the local power supply system must be observed.
- Before commencing work, disconnect the product from the mains and secure it against being switched on again.
- The connection must be secured by means of a residual-current device (RCD).
- The product must be earthed.
- Have defective cables replaced immediately by a qualified electrician.
- Never open the control module and never remove operating elements.

2.4 Operator responsibilities

- Have all work carried out by qualified personnel only.
- Ensure on-site guard against hot components and electrical hazards.
- Have defective gaskets and connection pipes replaced.

This device can be used by children from 8 years of age as well as people with reduced physical, sensory or mental capacities or lack of experience and knowledge if they are supervised or instructed on the safe use of the device and they understand the dangers that can occur. Children are not allowed to play with the device. Cleaning and user maintenance must not be carried out by children without supervision.

3 Description of the pump

High-efficiency circulator for drinking water systems with integrated differential pressure control. Control mode and delivery head (differential pressure) are adjustable. The differential pressure is controlled via the pump speed. For all control functions, the pump continuously adapts to the system's changing power requirements.

3.1 Overview

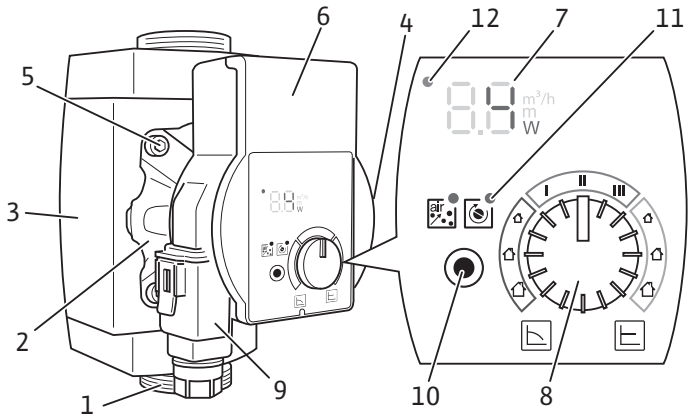

Fig. 1: Overview

Item	Name	Explanation
1.	Pump housing	With screwed connections
2.	Glandless motor	Drive unit
3.	Thermal insulation shell	2 half shells
4.	Rating plate	
5.	Housing screws	4 pieces for motor fixation
6.	Control module	Electronic unit with LED display
7.	LED display	Display of operating statuses
8.	Operating button	Settings of all parameters
9.	Wilo-Connector	Electrical mains connection
10	Function key	Start additional functions
11	Function LED	Lights up if additional function is activated
12	Fault signal LED	Lights up red in case of fault message

3.2 Operating and display elements

Operating button

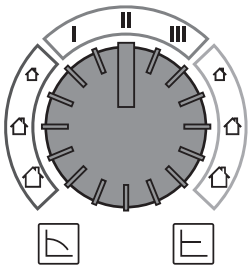

Turn:

- Select control mode.
- Set setpoint H of the delivery head (differential pressure).
- Select the constant speed (continuous or fixed).

LED display



Display of the setpoint H of the delivery head (differential pressure) in *m*.



Display of constant speed level
(c1 = I, c2 = II, c3 = III).



Display of the speed with continuous setting.
The speed (n) corresponds to the default value
x 100 [rpm].



Display of the current power consumption in *W*, alternating with the current flow rate in *m³/h*.

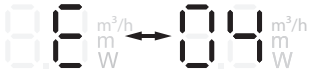

Display of warning and fault signals.



Display when pump venting function is activated
(The horizontal segments run as bars from bottom to top).



Display when pump restart is activated
(The outer segments run clockwise).

Function key



Press:

- Start pump venting function (press once).
- Activate pump restart (press twice).



3.3 Type key

Example: Yonos PICO-Z 20/0.5-4 150	
Yonos PICO	High-efficiency pump
-Z	Circulator for drinking water systems
20	Nominal diameter of screwed connection: 15 (G 1), 20 (G 1¼), 25 (G 1½)
0,5-4	0.5 = minimum delivery head in m 4 = maximum delivery head in m at Q = 0 m³/h
150	Port-to-port length in mm

3.4 Technical data

Connection voltage	1 ~ 230 V ± 10 %, 50/60 Hz
Protection class IP	See rating plate (4)
Fluid temperatures at max. ambient temperature +40 °C	+2 °C to +95 °C
Permitted ambient temperature	-10 °C to +40 °C
Max. operating pressure	10 bar (1000 kPa)
Minimum inlet pressure at +95 °C	0.3 bar (30 kPa)

3.5 Control mode and functions

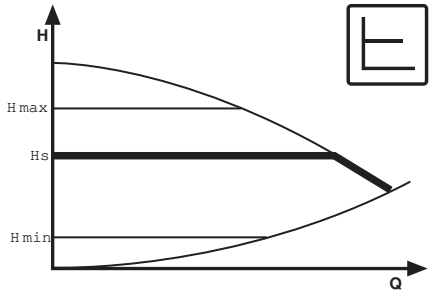

Constant differential pressure (Δp-c)

The control keeps the set delivery head constant at the set differential pressure setpoint Hs.
Recommended for systems with balancing valves.

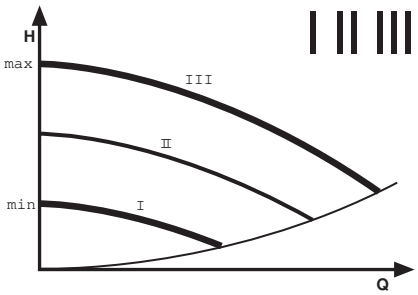

Constant speed I II III

The pump runs uncontrolled in three prescribed fixed speed stages.
Recommended for systems with fixed system resistance requiring a constant volume flow or for systems with balancing valves.

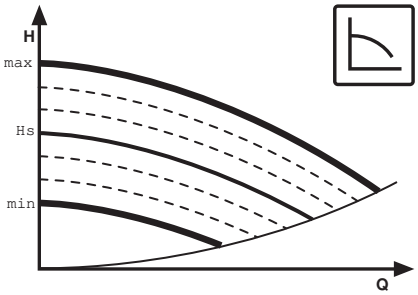

Constant speed

The pump is running uncontrolled via a continuously adjustable value at constant speed. The speed (n) corresponds to the default value x 100 [rpm].
Recommended for systems with fixed system resistance requiring a constant volume flow or for systems with balancing valves.

NOTICE

Factory setting: ½ n_{max} [rpm]

Pump venting function

The pump venting function is activated via the function key and automatically vents the pump for a period of 10 minutes.

The pump venting function removes accumulated air from the pump rotor chamber.
The domestic hot water circulation system is not vented using the pump venting function.

Manual restart

A manual restart is activated via the function key and unblocks the pump as required.

4 Application/use

4.1 Intended use

High-efficiency circulators from this series are only used for pumping drinking water in recirculation loop systems in industry and building services.

These pumps are specially adapted to the operating conditions in domestic hot water circulation systems through the selection of materials and their design, taking into account the national guidelines.

Permitted fluids:

- Drinking water according to EC Drinking Water Directive.
- Clean, non-aggressive, low-viscosity fluids in accordance with national drinking water provisions.

Regulations:

The current editions of the following regulations must be observed during installation:

- Accident prevention regulations
- DIN EN 806-5
- DVGW worksheet W551 and W553 (in Germany)
- VDE 0700/Part 1 (EN 60335-1)
- More local regulations

4.2 Misuse

The operational reliability of the supplied product is only guaranteed for intended use. The values must never fall below or exceed the limit values specified in the catalogue/data sheet.
Misuse of the pump can lead to dangerous situations and damage:

- Never use non-specified fluids.
- Highly flammable materials/fluids should always be kept at a safe distance from the product.
- Never allow unauthorised persons to carry out work.
- Never operate the pump beyond the specified limits of use.
- Never carry out unauthorised conversions.
- Never operate with phase angle control.
- Use authorised Wilo accessories and genuine spare parts only.

Intended use also includes observing these instructions and the specifications and markings on the pump.

Any use beyond the intended use is considered misuse and will void any warranty claims.

5 Transportation and storage

5.1 Scope of delivery

- High-efficiency circulator
- Thermal insulation shell
- 2 gaskets
- Wilo-Connector
- Installation and operating instructions

5.2 Transport inspection

Check delivery immediately for damage and completeness. Where necessary make a complaint immediately.

5.3 Transport and storage conditions

Protect against moisture, frost and mechanical loads.
Permissible temperature range: -10 °C to +40 °C

6 Installation and electrical connection



DANGER

Risk of fatal injury!

Incorrect installation and improper electrical connections can be life-threatening.

- Installation and electrical connection only by qualified personnel.
- Carry out work in accordance with locally applicable regulations.
- Adhere to accident prevention regulations.

6.1 Installation



WARNING

Risk of burns from hot surfaces!

Pump housing and glandless motor may become hot and cause burns if touched.

- During operation only touch the control module.
- Allow the pump to cool down before commencing any work.



WARNING

Risk of scalding from hot fluids!

Hot fluids can cause scalding.
Before the installation or removal of the pump or the dismantling of the housing screws, observe the following:

- Allow the drinking water system to cool down completely.
- Close shut-off valves or drain the drinking water system.

6.1.1 Preparation

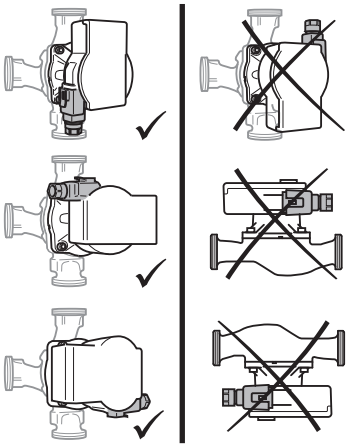

Fig. 2: Installation positions

CAUTION

An incorrect installation position may damage the pump!

- Select the installation site according to the permitted installation position (Fig. 2).
- The motor must always be installed horizontally.
- The electrical connection must never face upwards.

- Choose an installation point that is easily accessible.
- Observe the pump's permitted installation position (Fig. 2), rotate the motor head (2 + 6) if necessary.
- Install shut-off valves upstream and downstream of the pump to facilitate pump replacement.

CAUTION

Leaking water may damage the control module!

Align the upper shut-off valve on the side so that leaking water cannot drip onto the control module (6).

- Provide non-return valves.
- Complete all welding and soldering processes.
- Flush the pipeline system.

6.1.2 Rotating the motor head

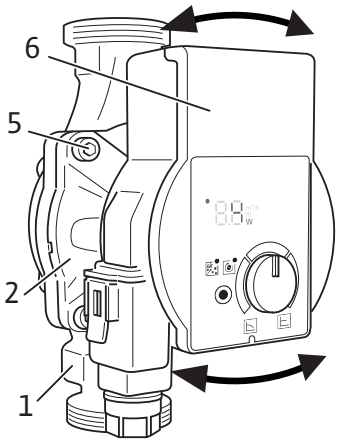

Fig. 3: Rotating the motor head



WARNING

Risk of fatal injury from magnetic field!

Highly magnetic components are fitted inside the pump; they can cause fatal injury to people with medical implants if the pump is dismantled.

- Never remove the rotor.

Rotate the motor head (Fig. 3) before installing and connecting the pump.

- If necessary, remove the thermal insulation shell.
- Hold the motor head (2+6) and unscrew the 4 housing screws (5).

CAUTION

Damage to the inner gasket causes leakage!

Carefully rotate the motor head without removing it from the pump housing.

- Carefully rotate the motor head (2+6).
- Observe the permitted installation position (Fig. 2) and the direction of flow arrow on the pump housing (1).
- Tighten the 4 housing screws (5).

6.1.3 Installing the pump

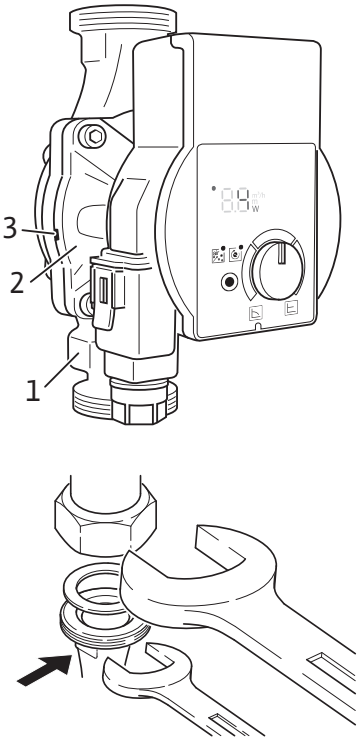

Fig. 4: Installing the pump

CAUTION

Corrosion damage!

Incorrect materials can cause corrosion damage to the pump.

- When connecting to galvanised piping, only use red-brass screwed connections.

Observe the following points when installing the pump:

- Note the direction of flow arrow on the pump housing (1).
- Install with horizontal glandless motor (2), without mechanical tension.
- Place gaskets in the screwed connections.
- Screw on threaded pipe unions.
- Use an open-end wrench to secure the pump against twisting and screw tightly to piping.
- Re-mount the thermal insulation shell if required.

CAUTION

Insufficient heat dissipation and condensate may damage the control module and glandless motor!

- Do not thermally insulate the glandless motor (2).
- Ensure all condensate drain openings (3) are kept free.

6.2 Electrical connection

DANGER

Risk of fatal injury from electrical voltage!

Immediate risk of fatal injury if live components are touched.

- Before commencing work, switch off the power supply and secure it from being switched on again.
- Never open the control module and never remove operating elements.

CAUTION

Pulsed mains voltage can cause damage to electronic components!

- Never operate the pump with phase angle control.
- When switching the pump on or off using an external control unit, de-activate any voltage pulse (e.g. phase angle control).
- For applications where it is not clear whether the pump is operated with pulsed voltage, get the control/system manufacturer to confirm that the pump is operated with sinusoidal AC voltage.
- Switching the pump on/off via triacs/solid-state relays must be examined on a case-by-case basis.

6.2.1 Preparation

- The current type and voltage must correspond to the specifications on the rating plate.
- Provide maximum back-up fuse: 10 A, slow-blow.
- If a residual-current device (RCD) is used, it is recommended to use an RCD type A (pulse current sensitive). Check that the rules for the coordination of electrical equipment in the electrical installation are observed and, if necessary, adjust the RCD accordingly.
- Only operate the pump with sinusoidal AC voltage.
- Observe the switching frequency:
  - Switch-on/off procedures via mains voltage ≤ 100/24 h.
  - ≤ 20/h for a switching frequency of 1 min. between switching on/off via mains voltage.

NOTICE

The inrush current of the pump is < 5 A. If the pump is switched “on” and “off” via a relay, it must be ensured that the relay is capable of switching an inrush current of at least 5 A. If necessary, obtain information from the boiler/control unit manufacturer.

- The electrical connection must be made via a fixed connecting cable equipped with a connector device or an all-pole switch with a contact opening width of at least 3 mm (DIN EN 60335-1).
- Use a connecting cable with sufficient outer diameter (e.g. H05VV-F3G1.5) to protect against leaking water and to ensure strain relief on the threaded cable connection.
- Use a heat-resistant connecting cable where fluid temperatures exceed 90 °C.
- Ensure that the connecting cable does not touch the pipes or the pump.

6.2.2 Connecting the pump

Installing the Wilo-Connector

- Disconnect the connecting cable from the power supply.
- Observe the terminal assignment (PE, N, L).
- Connect and install the Wilo-Connector (Fig. 5a to 5e).

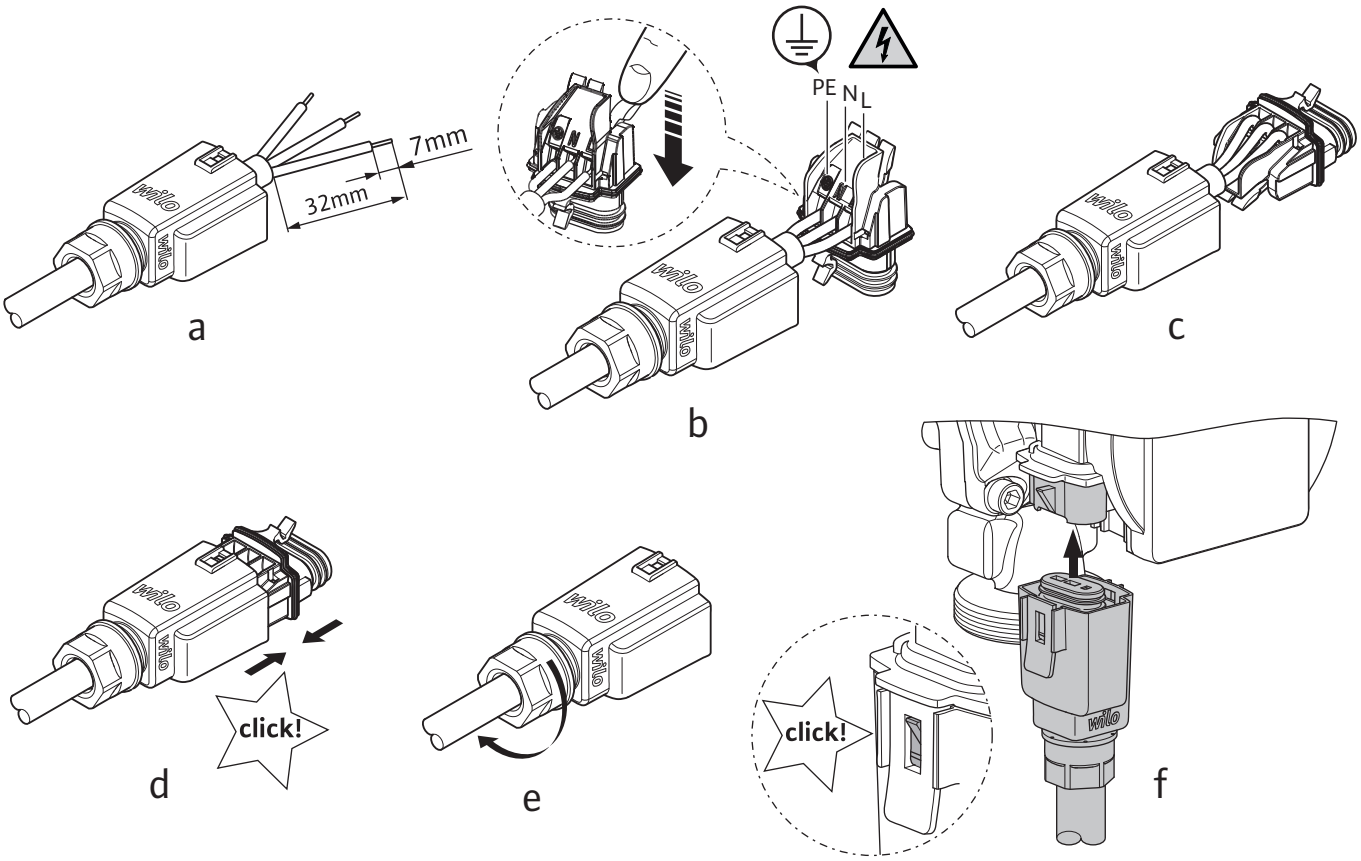

Fig. 5: Installing the Wilo-Connector

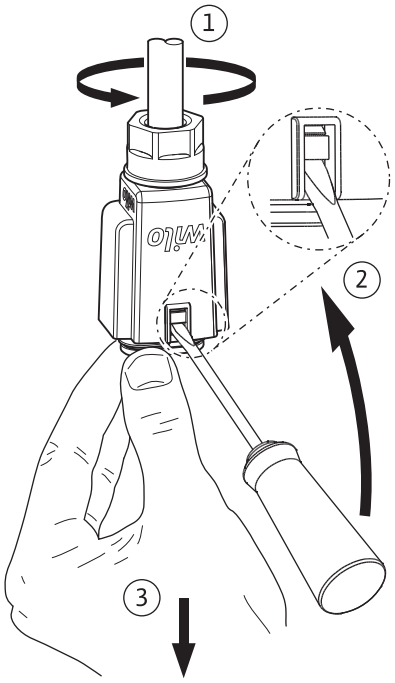

Fig. 6: Removing the Wilo-Connector

Connecting the pump

- Earth the pump.
- Connect the Wilo-Connector to the control module until it snaps into place (Fig. 5f).
- Activate the power supply.

Removing the Wilo-Connector

- Disconnect the connecting cable from the power supply.
- Remove the Wilo-Connector from the pump using a suitable screwdriver (Fig. 6).

7 Commissioning

7.1 Venting

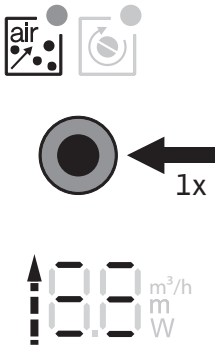

Fill and vent the system correctly.

If the pump does not vent automatically:

- Activate the pump venting function via the function key, briefly press 1x, LED lights green.
  - Pump venting function will start after 5 seconds with a duration of 10 minutes.
  - The horizontal segments of the LED display run as bars from bottom to top.
- To cancel, press the function key for a couple of seconds.

NOTICE

After venting, the LED display shows the previously set values of the pump.

7.2 Setting the control mode and the delivery head

The size of the displayed house symbols and data for setting the speed and delivery head are provided as a guide only. A more detailed calculation for the setting is recommended.

7.2.1 Constant differential pressure

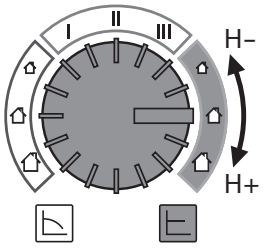

Constant differential pressure (Δp-c):

- Select constant differential pressure setting range.
- Set setpoint H of the delivery head (constant differential pressure).
  The values of the delivery head are displayed in increments of 0.1 m with the setting.
  - The LED display shows the setpoint H of the delivery head in *m*.

7.2.2 Constant speed

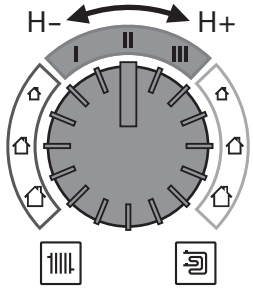

Constant speed I II III:

- Select the setting range of the fixed constant speed.
- Select speed stage I II or III.
  - The LED display shows the set speed c1, c2 or c3 according to the characteristic curve.

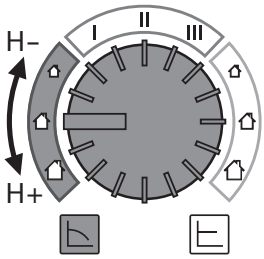

Constant speed:

- Select the setting range of the continuous constant speed.
- Set speed value. The speed (n) corresponds to the default value x 100 [rpm].
  - LED display indicates the set speed value.
    Examples:
    780 rpm (motor) → 7 (LED display)
    2635 rpm (motor) → 26 (LED display)

7.2.3 Completing the settings

- Do not rotate the operating button for 2 seconds.
  - LED display flashes 5 times and changes to the current power consumption in *W*, alternating with the current flow rate in m^3/h.

NOTICE

All settings and displays are retained if the power supply is interrupted.

8 Shutdown

8.1 Shutting down the pump

Shut down the pump immediately if the connecting cable or other electrical components are damaged.

- Disconnect the pump from the power supply.
- Contact Wilo customer service or a specialist technician.

9 Maintenance

No special maintenance is required during operation.

- Carefully remove dirt from the pump on a regular basis using a dry duster.
- Never use liquids or aggressive cleaning agents.

10 Faults, causes and remedies

DANGER

Risk of fatal electrical shock!

Ensure there are no risks arising from electrical current!

- The pump must be voltage-free and secured against unauthorised reactivation prior to any repair work.
- Damage to the mains connecting cables should always be repaired by a qualified electrician only.

WARNING

Risk of scalding!

At high fluid temperatures and system pressures, allow the pump to cool down first and then depressurise the system.

Faults	Causes	Remedies
Pump is not running with switched-on power supply.	Electric fuse defective.	Check the fuse protection.
Pump is not running with switched-on power supply.	Pump has no voltage.	Reconnect the voltage.
Pump runs, there is no circulation.	Circulation piping not filled/ not vented.	Circulation piping filled and vented.
Pump makes noises.	Cavitation due to insufficient suction pressure.	Increase the system pressure within the permissible range.
Pump makes noises.	Cavitation due to insufficient suction pressure.	Check speed/delivery head setting and set lower speed/ delivery head if necessary.

10.1 Warning messages

- The warning signal is indicated by the LED display.
- The pump continues to run with limited output.
- The indicated faulty operating status must not occur for a prolonged period. The cause must be eliminated.

LED	Faults	Causes	Remedies
E07	Generator operation	Water is flowing through the pump hydraulics but there is no mains voltage to the pump.	Check mains voltage.
E10	Blocking	The rotor is continuously blocked.	Automatic restart is triggered.
E11	Pump running dry	Air in the pump.	Check volume flow / water pressure.
E21	Overload	Sluggish motor, pump is operated outside of its specifications (e.g. high module temperature). The speed is lower than during normal operation.	Check the ambient conditions.

10.2 Fault messages

- The fault signal is indicated by the LED display.
- The pump switches off (depending on the error code) and attempts a cyclical restart.

LED	Faults	Causes	Remedies
E04	Undervoltage	Power supply too low on mains side.	Check mains voltage.
E05	Overvoltage	Power supply too high on mains side.	Check mains voltage.
E10	Blocking	Rotor blocked.	Activate manual restart or contact customer service.
E23	Short-circuit	Motor current too high.	Contact customer service.
E25	Contacting/winding	Winding defective.	Contact customer service.
E30	Excessive temperature of module	Interior of module too warm.	Check operation conditions.
E36	Module defective	Electronics defective.	Contact customer service.

Manual restart



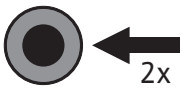



The pump attempts an automatic restart upon detecting a blockage.

If the pump does not restart automatically (E10):

- Activate the manual restart via the function key, briefly press 2x, LED lights green.
  - A restart is performed after 5 seconds, duration 10 minutes.
  - The outer segments of the LED display run clockwise.
- To cancel, press the function key for a couple of seconds.

NOTICE

After the restart, the LED display shows the previously set values of the pump.

If the fault cannot be remedied, contact an installer or the Wilo customer service.

11 Disposal

11.1 Information on the collection of used electrical and electronic products

Proper disposal and appropriate recycling of this product prevents damage to the environment and putting your personal health at risk.

NOTICE

Disposal in domestic waste is prohibited!

In the European Union this symbol may be included on the product, the packaging or the accompanying documentation. It means that the electrical and electronic products in question must not be disposed of along with domestic waste.

Please note the following points to ensure proper handling, recycling and disposal of the used products in question:

- Hand over these products at designated, certified collection points only.
- Observe the locally applicable regulations!

Please consult your local municipality, the nearest waste disposal site, or the dealer who sold the product to you for information on proper disposal. See www.wilo-recycling.com for more information about recycling.

Subject to change without prior notice!

DECLARATION OF CONFORMITY

We, the manufacturer, declare under our sole responsability that these glandless circulating pump types of the series,

Yonos PICO -Z...

(The serial number is marked on the product site plate)

in their delivered state comply with the following relevant directives and with the relevant national legislation:

_ Electrical Equipment (Safety) Regulations (SI 2016 No. 1101) amended

_ Electromagnetic Compatibility (EMC) Regulations (SI 2016 No. 1091) amended

_ Restriction of the Use of Certain Hazardous Substances (RoHS) in Electrical and Electronic Equipment Regulations (SI 2012 No. 3032) amended

comply also with the following relevant standards:

BS EN 60335-1:2012+A11:2014+A13:2017+A1:2019+A2:2019+A14:2019;
BS EN 60335-2-51:2003+A1:2008+A2:2012;
BS EN IEC 61000-6-1:2019; BS EN IEC 61000-6-2:2019;
BS EN IEC 61000-6-3:2021; BS EN IEC 61000-6-4:2019;
BS EN IEC 63000:2018;

Person who places the product on the market:

Wilo (UK) Ltd
2nd Avenue, Centrum 100
Burton upon Trent - DE14 2WJ
Staffordshire - United Kingdom

Dortmund,

ppa.

Digital unterschrieben
von Holger Herchenhein
Datum: 2022.09.15
16:13:12 +02'00'

H. HERCHENHEIN
Senior Vice President - Group Quality & Qualification

Wilopark 1
D-44263 Dortmund

ORIGINAL DECLARATION

F_GQ_013-78

Declaration n°2223544-rev01

PC As-Sh n°4258258-GB-rev01

DECLARATION OF CONFORMITY

We, the manufacturer, declare under our sole responsability that these glandless circulating pump types of the series,

Yonos PICO -Z...

(The serial number is marked on the product site plate)

in their delivered state comply with the following relevant directives and with the relevant national legislation:

_ELECTRICAL EQUIPMENT SAFETY SCHEME (EESS)

_ RADIOCOMMUNICATIONS LABELLING (ELECTROMAGNETIC COMPATIBILITY) NOTICE 2017

comply also with the following relevant standards:

AS/NZS 60335.1:2020; AS/NZS 60335.2.51:2020; AS/NZS 61000.6.1:2006 (R2016); AS/NZS 61000.6.2:2006 (R2016); AS/NZS 61000.6.3:2021; AS 61000.6.4:2020;

Person authorized to compile the technical file is:

WILO SE
Group Quality
Wilopark 1
D-44263 Dortmund

Dortmund,

ppa.

Digital unterschrieben von Holger Herchenhein
Datum: 2022.10.17 09:32:03 +02'00'

H. HERCHENHEIN
Senior Vice President - Group Quality & Qualification

Wilopark 1
D-44263 Dortmund

Declaration n°2223580-rev01

PC As-Sh n°4258258-ANZ-rev01

ORIGINAL DECLARATION

F_GQ_013-79

DECLARATION OF CONFORMITY
KONFORMITÄTSERKLÄRUNG

We, the manufacturer, declare under our sole responsibility that these glandless circulating pump types of the series,
Als Hersteller erklären wir unter unserer alleinigen Verantwortung, dass die Nassläufer-Umwälzpumpen der Baureihen,

Yonos PICO -Z...

(The serial number is marked on the product site plate)
(Die Seriennummer ist auf dem Typenschild des Produktes angegeben)

in their delivered state comply with the following relevant directives and with the relevant national legislation:
in der gelieferten Ausführung folgenden einschlägigen Bestimmungen entsprechen 'und entsprechender nationaler Gesetzgebung:

_ 2014/35/EU - LOW VOLTAGE / NIEDERSPANNUNGSRICHTLINIE

_ 2014/30/EU - ELECTROMAGNETIC COMPATIBILITY / ELEKTROMAGNETISCHE VERTRÄGLICHKEIT - RICHTLINIE

_ 2011/65/EU + 2015/863 - RESTRICTION OF THE USE OF CERTAIN HAZARDOUS SUBSTANCES / BESCHRÄNKUNG DER VERWENDUNG BESTIMMTER GEFÄHRLICHER STOFFE-RICHTLINIE

comply also with the following relevant standards:
sowie auch den Bestimmungen zu folgenden harmonisierten europäischen Normen:

**EN 60335-1:2012+A11:2014+A13:2017+A1:2019+A2:2019+A14:2019+A15:2021;
EN 60335-2-51:2003+A1:2008+A2:2012; EN IEC 61000-6-1:2019; EN IEC 61000-6-2:2019;
EN IEC 61000-6-3:2021; EN IEC 61000-6-4:2019; EN IEC 63000:2018;**

Person authorized to compile the technical file is:
Bevollmächtigter für die Zusammenstellung der technischen Unterlagen ist:

WILO SE
Group Quality
Wilopark 1
D-44263 Dortmund

Dortmund,

ppa. H. Herchenhein

Digital unterschrieben
von Holger Herchenhein
Datum: 2022.09.15
16:12:35 +02'00'

H. HERCHENHEIN
Senior Vice President - Group Quality & Qualification

wilo

Wilopark 1
D-44263 Dortmund

Declaration n°2223542-rev01

PC As-Sh n°4258258-EU-rev01

ORIGINAL DECLARATION / ORIGINAL-ERKLÄRUNG

F_GQ_013-78

EL

Επίσημη μετάφραση της Διακήρυξης

Εμείς, ο κατασκευαστής, δηλώνουμε με αποκλειστικά δική μας ευθύνη ότι οι υδρολίπαντοι κυκλοφορητές της σειράς

(Ο σειριακός αριθμός σημειώνεται στο ταμπελάκι του προϊόντος)

Yonos PICO -Z...

στην κατάσταση παράδοσης συμμορφώνονται με τις ακόλουθες σχετικές οδηγίες και τη σχετική εθνική νομοθεσία:

|| 2014/35/EU - Χαμηλής Τάσης || 2014/30/EU - Ηλεκτρομαγνητικής συμβατότητας || 2011/65/EU + 2015/863 - για τον περιορισμό της χρήσης ορισμένων επικίνδυνων ουσιών

συμμορφώνεται επίσης με εναρμονισμένα πρότυπα:

EN 60335-1:2012+A11:2014+A13:2017+A1:2019+A2:2019+A14:2019+A15:2021;
EN 60335-2-51:2003+A1:2008+A2:2012; EN IEC 61000-6-1:2019; EN IEC 61000-6-2:2019;
EN IEC 61000-6-3:2021; EN IEC 61000-6-4:2019; EN IEC 63000:2018;

WILO SE
Group Quality
Wilopark 1

Πρόσωπο εξουσιοδοτημένο να συντάξει το τεχνικό αρχείο είναι: D-44263 Dortmund

ES

Traducción oficial de la Declaración

Nosotros, el fabricante, declaramos bajo nuestra exclusiva responsabilidad que los circuladores de rotor húmedo de la(s) serie(s)

(El nº de serie está marcado en la placa de características del producto)

Yonos PICO -Z...

cumple en la ejecución suministrada las siguientes disposiciones pertinentes y la legislación nacional correspondiente:

|| 2014/35/EU - Baja Tensión || 2014/30/EU - Compatibilidad Electromagnética || 2011/65/EU + 2015/863 - Restricciones a la utilización de determinadas sustancias peligrosas

así como las disposiciones de las siguientes normas europeas armonizadas:

EN 60335-1:2012+A11:2014+A13:2017+A1:2019+A2:2019+A14:2019+A15:2021;
EN 60335-2-51:2003+A1:2008+A2:2012; EN IEC 61000-6-1:2019; EN IEC 61000-6-2:2019;
EN IEC 61000-6-3:2021; EN IEC 61000-6-4:2019; EN IEC 63000:2018;

WILO SE
Group Quality
Wilopark 1

Persona autorizada para la recopilación de los documentos técnicos: D-44263 Dortmund

FR

Traduction officielle de la déclaration

Nous, fabricant, déclarons sous notre seule responsabilité que les types de circulateurs des séries,

Le numéro de série est inscrit sur la plaque signalétique du produit)

Yonos PICO -Z...

dans leur état de livraison sont conformes aux dispositions des directives suivantes et aux législations nationales les transposant :

|| 2014/35/EU - BASSE TENSION || 2014/30/EU - COMPATIBILITE ELECTROMAGNETIQUE || 2011/65/EU + 2015/863 - LIMITATION DE L'UTILISATION DE CERTAINES SUBSTANCES DANGEREUSES

sont également conformes aux dispositions des normes européennes harmonisées suivantes :

EN 60335-1:2012+A11:2014+A13:2017+A1:2019+A2:2019+A14:2019+A15:2021;
EN 60335-2-51:2003+A1:2008+A2:2012; EN IEC 61000-6-1:2019; EN IEC 61000-6-2:2019;
EN IEC 61000-6-3:2021; EN IEC 61000-6-4:2019; EN IEC 63000:2018;

WILO SE
Group Quality
Wilopark 1

Personne autorisée à constituer le dossier technique est : D-44263 Dortmund

IT

Traduzione ufficiale della Dichiarazione

Noi, il costruttore, dichiariamo sotto la nostra esclusiva responsabilità che questi tipi di circolatori a rotore bagnato della serie,

(Il numero di serie è riportato sulla targhetta del sito del prodotto)

Yonos PICO -Z...

allo stato di consegna sono conformi alle seguenti direttive pertinenti e alla legislazione nazionale pertinente:

|| 2014/35/EU - Bassa Tensione || 2014/30/EU - Compatibilità Elettromagnetica || 2011/65/EU + 2015/863 - sulla restrizione dell'uso di determinate sostanze pericolose

rispettare anche le seguenti norme pertinenti:

EN 60335-1:2012+A11:2014+A13:2017+A1:2019+A2:2019+A14:2019+A15:2021;
EN 60335-2-51:2003+A1:2008+A2:2012; EN IEC 61000-6-1:2019; EN IEC 61000-6-2:2019;
EN IEC 61000-6-3:2021; EN IEC 61000-6-4:2019; EN IEC 63000:2018;

WILO SE
Group Quality
Wilopark 1

La persona autorizzata a compilare il fascicolo tecnico è: D-44263 Dortmund

PT

Tradução oficial da Declaração

Nós, o fabricante, declaramos sob nossa exclusiva responsabilidade que o(s) circulador(es) de rotor húmido da(s) série(s),

(O nº de série está marcado na placa de características do produto)

Yonos PICO -Z...

está em conformidade com a versão fornecida nas seguintes disposições relevantes e de acordo com a legislação nacional

|| 2014/35/EU - Baixa Voltagem || 2014/30/EU - Compatibilidade Electromagnética || 2011/65/EU + 2015/863 - relativa à restrição do uso de determinadas substâncias perigosas

assim como as seguintes disposições das normas europeias

EN 60335-1:2012+A11:2014+A13:2017+A1:2019+A2:2019+A14:2019+A15:2021;
EN 60335-2-51:2003+A1:2008+A2:2012; EN IEC 61000-6-1:2019; EN IEC 61000-6-2:2019;
EN IEC 61000-6-3:2021; EN IEC 61000-6-4:2019; EN IEC 63000:2018;

WILO SE
Group Quality
Wilopark 1

Pessoa autorizada para a elaboração de documentos técnicos: D-44263 Dortmund

DA — **Officiel oversættelse af erklæringen**

Vi, producenten, erklærer under vores eget ansvar, at disse kirtelfrie cirkulationspumpetyper i serien,
(Serienummeret er markeret på produktpladen)
Yonos PICO -Z...
i deres leverede tilstand overholde følgende relevante direktiver og den relevante nationale lovgivning:

|| 2014/35/EU - Lavspændings || 2014/30/EU - Elektromagnetisk Kompatibilitet || 2011/65/EU + 2015/863 - Begrænsning af anvendelsen af visse farlige stoffer

også overholde følgende relevante standarder:
EN 60335-1:2012+A11:2014+A13:2017+A1:2019+A2:2019+A14:2019+A15:2021; EN 60335-2-51:2003+A1:2008+A2:2012; EN IEC 61000-6-1:2019; EN IEC 61000-6-2:2019; EN IEC 61000-6-3:2021; EN IEC 61000-6-4:2019; EN IEC 63000:2018;

WILO SE
Group Quality
Wilopark 1
Person, der er autoriseret til at udarbejde den tekniske fil, er: D-44263 Dortmund

ET — **Deklaratsiooni ametlik tõlge**

Meie, tootja, kuulutame ainuisikulisel vastutusel, et need seeria näärmeteta tsirkulatsioonipumbad,
(Seerianumber on märgitud toote saidi plaadile)
Yonos PICO -Z...
oma tarnitud olekus järgima järgmisi asjakohaseid direktiive ja asjakohaseid siseriiklikke õigusakte:

|| 2014/35/EU - Madalpingeseadmed || 2014/30/EU - Elektromagnetilist Ühilduvust || 2011/65/EU + 2015/863 - teatavate ohtlike ainete kasutamise piiramise kohta

vastama ka järgmistele asjakohastele standarditele:
EN 60335-1:2012+A11:2014+A13:2017+A1:2019+A2:2019+A14:2019+A15:2021; EN 60335-2-51:2003+A1:2008+A2:2012; EN IEC 61000-6-1:2019; EN IEC 61000-6-2:2019; EN IEC 61000-6-3:2021; EN IEC 61000-6-4:2019; EN IEC 63000:2018;

WILO SE
Group Quality
Wilopark 1
Tehnilise toimiku koostamiseks on volitatud isik: D-44263 Dortmund

FI — **Julistuksen virallinen käännös**

Me valmistaja vakuutamme yksinomaisella vastuullamme, että nämä sarjan tiivisteettömät kiertovesipumput,
(Sarjanumero on merkitty tuotekohtaiseen kilpeen)
Yonos PICO -Z...
toimitetussa tilassa noudattavat seuraavia asiaankuuluvia direktiivejä ja asiaa koskevaa kansallista lainsäädäntöä:

|| 2014/35/EU - Matala Jännite || 2014/30/EU - Sähkömagneettinen Yhteensopivuus || 2011/65/EU + 2015/863 - tiettyjen vaarallisten aineiden käytön rajoittamisesta

noudattamaan myös seuraavia asiaankuuluvia standardeja:
EN 60335-1:2012+A11:2014+A13:2017+A1:2019+A2:2019+A14:2019+A15:2021; EN 60335-2-51:2003+A1:2008+A2:2012; EN IEC 61000-6-1:2019; EN IEC 61000-6-2:2019; EN IEC 61000-6-3:2021; EN IEC 61000-6-4:2019; EN IEC 63000:2018;

WILO SE
Group Quality
Wilopark 1
Henkilö, jolla on valtuudet koota tekninen tiedosto, on: D-44263 Dortmund

IS — **Opinber þýðing á yfirlýsingunni**

Við framleiðandinn lýsum því yfir undir ábyrgð okkar einungis að þessar kirtillausu hringlaga dælugerðir seríunnar,
(Raðnúmerið er merkt á plötunni á vörustaðnum)
Yonos PICO -Z...
í afhentu ástandi í samræmi við eftirfarandi viðeigandi tilskipanir og viðeigandi innlenda löggjöf:

|| 2014/35/EU - Lágspennutilskipun || 2014/30/EU - Rafseguls-samhæfni-tilskipun || 2011/65/EU + 2015/863 - Takmörkun á notkun tiltekinna hættulegra efna

uppfylla einnig eftirfarandi viðeigandi staðla:
EN 60335-1:2012+A11:2014+A13:2017+A1:2019+A2:2019+A14:2019+A15:2021; EN 60335-2-51:2003+A1:2008+A2:2012; EN IEC 61000-6-1:2019; EN IEC 61000-6-2:2019; EN IEC 61000-6-3:2021; EN IEC 61000-6-4:2019; EN IEC 63000:2018;

WILO SE
Group Quality
Wilopark 1
Sá sem hefur heimild til að taka saman tækniskrána er: D-44263 Dortmund

LT — **Oficialus deklaracijos vertimas**

Mes, kaip gamintojas, savo atsakomybės ribose deklaruojame, kad šios serijos šlapio rotoriaus siurblių modeliai,
(Serijos numeris pažymėtas ant produkto lentelės)
Yonos PICO -Z...
taip kaip pristatyti, atitinka sekančias aktualias direktyvas ir nacionalines teisės normas bei reglamentus:

|| 2014/35/EU - Žema įtampa || 2014/30/EU - Elektromagnetinis Suderinamumas || 2011/65/EU + 2015/863 - dėl tam tikrų pavojingų medžiagų naudojimo apribojimo

taip pat atitinka sekančius aktualius standartus:
EN 60335-1:2012+A11:2014+A13:2017+A1:2019+A2:2019+A14:2019+A15:2021; EN 60335-2-51:2003+A1:2008+A2:2012; EN IEC 61000-6-1:2019; EN IEC 61000-6-2:2019; EN IEC 61000-6-3:2021; EN IEC 61000-6-4:2019; EN IEC 63000:2018;

WILO SE
Group Quality
Wilopark 1
Asmuo įgaliotas sudaryti techninius dokumentus yra: D-44263 Dortmund

LV — **Deklarācijas oficiālais tulkojums**

Mēs, ražotājs, ar pilnu atbildību paziņojam, ka šie slapjā rotora cirkulācijas sūkņu tipi,

(Sērijas numurs ir norādīts uz izstrādājuma plāksnītes)

Yonos PICO -Z...

piegādātāja valstī atbilst šādām attiecīgām direktīvām un attiecīgiem valsts tiesību aktiem:

|| 2014/35/EU - Zemsprieguma || 2014/30/EU - Elektromagnētiskās Saderības || 2011/65/EU + 2015/863 - par dažu bīstamu vielu izmantošanas ierobežošanu 2011/65/UE

atbilst arī sekojošiem attiecīgiem standartiem:

EN 60335-1:2012+A11:2014+A13:2017+A1:2019+A2:2019+A14:2019+A15:2021;
EN 60335-2-51:2003+A1:2008+A2:2012; EN IEC 61000-6-1:2019; EN IEC 61000-6-2:2019;
EN IEC 61000-6-3:2021; EN IEC 61000-6-4:2019; EN IEC 63000:2018;

WILO SE
Group Quality
Wilopark 1

Persona pilnvarota sastādīt tehnisko dokumentāciju: D-44263 Dortmund

NL — **Officiële vertaling van de verklaring**

Wij, de fabrikant, verklaren onder onze eigen verantwoordelijkheid dat deze natloper-circulatiepompen van de serie,

(Het serienummer staat vermeld op het naamplaatje van het product)

Yonos PICO -Z...

in de geleverde versie voldoen aan de volgende relevante bepalingen en aan de overeenkomstige nationale wetgeving:

|| 2014/35/EU - Laagspannings || 2014/30/EU - Elektromagnetische Compatibiliteit || 2011/65/EU + 2015/863 - betreffende beperking van het gebruik van bepaalde gevaarlijke stoffen

voldoen ook aan de volgende relevante normen:

EN 60335-1:2012+A11:2014+A13:2017+A1:2019+A2:2019+A14:2019+A15:2021;
EN 60335-2-51:2003+A1:2008+A2:2012; EN IEC 61000-6-1:2019; EN IEC 61000-6-2:2019;
EN IEC 61000-6-3:2021; EN IEC 61000-6-4:2019; EN IEC 63000:2018;

WILO SE
Group Quality
Wilopark 1

De persoon die bevoegd is om het technische bestand samen te stellen is: D-44263 Dortmund

NO — **Offisiell oversettelse av erklæring**

Vi som produsent erklærer herved vårt ansvar at våtløper sirkulasjonspumper under type serie,

(serienummeret er markert på pumpeskilt)

Yonos PICO -Z...

I levert tilstand vil produkt overholde følgende direktiver og relevant nasjonal lovgivning

|| 2014/35/EU - Lavspenningsdirektiv || 2014/30/EU - EMV–Elektromagnetisk kompatibilitet || 2011/65/EU + 2015/863 - Begrensning av bruk av visse farlige stoffer

Oppfølger også relevante standarder

EN 60335-1:2012+A11:2014+A13:2017+A1:2019+A2:2019+A14:2019+A15:2021;
EN 60335-2-51:2003+A1:2008+A2:2012; EN IEC 61000-6-1:2019; EN IEC 61000-6-2:2019;
EN IEC 61000-6-3:2021; EN IEC 61000-6-4:2019; EN IEC 63000:2018;

WILO SE
Group Quality
Wilopark 1

Vedkommendesom er autorisert til å sammenstille teknisk fil er: D-44263 Dortmund

SV — **Officiell översättning av försäkran**

Vi, tillverkaren, försäkrar under eget ansvar att de våtlöpande cirkulationspumparna i serien

(Serienumret finns utmärkt på produktens dataskylt)

Yonos PICO -Z...

i det utförande de levererades överrenstämmer med följande relevanta direktiv och relevant nationell lagstiftning

|| 2014/35/EU - Lågspännings || 2014/30/EU - Elektromagnetisk Kompatibilitet || 2011/65/EU + 2015/863 - begränsning av användning av vissa farliga ämnen

överrenstämmer också med följande relevanta standarder:

EN 60335-1:2012+A11:2014+A13:2017+A1:2019+A2:2019+A14:2019+A15:2021;
EN 60335-2-51:2003+A1:2008+A2:2012; EN IEC 61000-6-1:2019; EN IEC 61000-6-2:2019;
EN IEC 61000-6-3:2021; EN IEC 61000-6-4:2019; EN IEC 63000:2018;

WILO SE
Group Quality
Wilopark 1

Person behörig att sammanställa denna tekniska fil är: D-44263 Dortmund

GA — **Eadar-theangachadh oifigeil den Ghairm**

Bidh sinn, an neach-dèanamh, a 'foillseachadh fon aon uallach againn gu bheil na seòrsachan pumpa cuairteachaidh glandless seo den t-sreath,

(Tha an àireamh sreathach air a chomharrachadh air clàr làrach an toraidh)

Yonos PICO -Z...

anns an stàit lìbhrigidh aca gèilleadh ris na stiùiridhean buntainneach a leanas agus ris an reachdas nàiseanta buntainneach:

|| 2014/35/EU - Ísealvoltais || 2014/30/EU - Comhoiriúnacht Leictreamaighnéadach || 2011/65/EU + 2015/863 - Srian ar an úsáid a bhaint as substaintí guaiseacha acu

gèilleadh cuideachd ris na h-inbhean iomchaidh a leanas:

EN 60335-1:2012+A11:2014+A13:2017+A1:2019+A2:2019+A14:2019+A15:2021;
EN 60335-2-51:2003+A1:2008+A2:2012; EN IEC 61000-6-1:2019; EN IEC 61000-6-2:2019;
EN IEC 61000-6-3:2021; EN IEC 61000-6-4:2019; EN IEC 63000:2018;

WILO SE
Group Quality
Wilopark 1

Is e an neach le ùghdarras am faidhle teicnigeach a chur ri chèile: D-44263 Dortmund

BG

Официален превод на Декларация

Ние, като производител, декларираме на собствена отговорност, че помпите с мокър ротор от серията,

Серийните номера са обозначени на табелата на продукта

Yonos PICO -Z...

В доставения им вид са в съответствие приложимите за държавата директиви и законодателство

|| 2014/35/EU - Ниско Напрежение || 2014/30/EU - Електромагнитна съвместимост || 2011/65/EU + 2015/863 - относно ограничението за употребата на определени опасни вещества

Също така отговарят на следните изискуеми норми:

EN 60335-1:2012+A11:2014+A13:2017+A1:2019+A2:2019+A14:2019+A15:2021;
EN 60335-2-51:2003+A1:2008+A2:2012; EN IEC 61000-6-1:2019; EN IEC 61000-6-2:2019;
EN IEC 61000-6-3:2021; EN IEC 61000-6-4:2019; EN IEC 63000:2018;

WILO SE
Group Quality
Wilopark 1

Лицето, упълномощено да състави техническия доклад е: D-44263 Dortmund

CS

Oficiální překlad Prohlášení

My, výrobce, prohlašujeme na základě naší výhradní odpovědnosti, že tyto bezucpávkové oběhové čerpadlo řady,

(Sériové číslo je uvedeno na výrobním štítku)

Yonos PICO -Z...

ve svém dodaném stavu dodržovat následující relevantní směrnice a příslušnou národní legislativu:

|| 2014/35/EU - Nízké Napětí || 2014/30/EU - Elektromagnetická Kompatibilita || 2011/65/EU + 2015/863 - Omezení používání některých nebezpečných látek

dodržovat také následující relevantní normy:

EN 60335-1:2012+A11:2014+A13:2017+A1:2019+A2:2019+A14:2019+A15:2021;
EN 60335-2-51:2003+A1:2008+A2:2012; EN IEC 61000-6-1:2019; EN IEC 61000-6-2:2019;
EN IEC 61000-6-3:2021; EN IEC 61000-6-4:2019; EN IEC 63000:2018;

WILO SE
Group Quality
Wilopark 1

Osoba oprávněná sestavit technickou dokumentaci je: D-44263 Dortmund

HR

Službeni prijevod Deklaracije

Mi, proizvođač, izjavljujemo pod isključivom odgovornošću da ova mokrorotorna pumpa tipa iz serije,

(Serijski broj je označen na tipskoj pločici proizvoda)

Yonos PICO -Z...

u isporučenom stanju odgovara sljedećim relevantnim direktivama i relevantnom nacionalnom zakonodavstvu:

|| 2014/35/EU - Smjernica o niskom naponu || 2014/30/EU - Elektromagnetna kompatibilnost - smjernica || 2011/65/EU + 2015/863 - ograničenju uporabe određenih opasnih tvari

u skladu također i sa sljedećim relevantnim standardima:

EN 60335-1:2012+A11:2014+A13:2017+A1:2019+A2:2019+A14:2019+A15:2021;
EN 60335-2-51:2003+A1:2008+A2:2012; EN IEC 61000-6-1:2019; EN IEC 61000-6-2:2019;
EN IEC 61000-6-3:2021; EN IEC 61000-6-4:2019; EN IEC 63000:2018;

WILO SE
Group Quality
Wilopark 1

Osoba ovlaštena za sastavljanje tehničke dokumentacije: D-44263 Dortmund

HU

A Nyilatkozat hivatalos fordítása

Mi, a gyártó, saját felelősségünkre kijelentjük, hogy a sorozat nedvestengelyű keringető szivattyúi,

(A sorozatszámot a termék adattábláján feltüntetik)

Yonos PICO -Z...

leszállított kivitelükben feleljenek meg a következő vonatkozó irányelveknek és a vonatkozó nemzeti irányelveknek

|| 2014/35/EU - Alacsony Feszültségű || 2014/30/EU - Elektromágneses összeférhetőségre || 2011/65/EU + 2015/863 - egyes veszélyes való alkalmazásának korlátozásáról

megfeleljen a következő vonatkozó előírásoknak is:

EN 60335-1:2012+A11:2014+A13:2017+A1:2019+A2:2019+A14:2019+A15:2021;
EN 60335-2-51:2003+A1:2008+A2:2012; EN IEC 61000-6-1:2019; EN IEC 61000-6-2:2019;
EN IEC 61000-6-3:2021; EN IEC 61000-6-4:2019; EN IEC 63000:2018;

WILO SE
Group Quality
Wilopark 1

A műszaki dokumentáció összeállítására jogosult személy: D-44263 Dortmund

PL

Oficjalne tłumaczenie Deklaracji Zgodności

Producent oświadcza na wyłączną odpowiedzialność, że typoszeregi bez dławnicowych pomp obiegowych z serii

(Numer seryjny znajduje się na tabliczce znamionowej produktu)

Yonos PICO -Z...

w stanie dostarczonym są zgodne z następującymi dyrektywami i przepisami krajowymi mającymi zastosowanie:

|| 2014/35/EU - Niskich Napięć || 2014/30/EU - Kompatybilności Elektromagnetycznej || 2011/65/EU + 2015/863 - sprawie ograniczenia stosowania niektórych niebezpiecznych substancji

są również zgodne z następującymi specyfikacjami technicznymi mającymi zastosowanie:

EN 60335-1:2012+A11:2014+A13:2017+A1:2019+A2:2019+A14:2019+A15:2021;
EN 60335-2-51:2003+A1:2008+A2:2012; EN IEC 61000-6-1:2019; EN IEC 61000-6-2:2019;
EN IEC 61000-6-3:2021; EN IEC 61000-6-4:2019; EN IEC 63000:2018;

WILO SE
Group Quality
Wilopark 1

Osoba upoważniona do sporządzenia dokumentacji technicznej: D-44263 Dortmund

RO — **Traducere oficială a Declarației**

Noi, producătorul, declarăm sub responsabilitatea noastră exclusivă că aceste tipuri de pompe de recirculare cu rotor umed, din seria
(Numărul serial este marcat pe plăcuta de identificare a produsului) **Yonos PICO -Z...**
în starea lor livrată, respectă următoarele directive relevante și legislația națională relevantă:

|| 2014/35/EU - Joasă Tensiune || 2014/30/EU - Compatibilitate Electromagnetică || 2011/65/EU + 2015/863 - privind restricțiile de utilizare a anumitor substanțe periculoase

sunt conforme, de asemenea, cu următoarele standarde relevante
EN 60335-1:2012+A11:2014+A13:2017+A1:2019+A2:2019+A14:2019+A15:2021; EN 60335-2-51:2003+A1:2008+A2:2012; EN IEC 61000-6-1:2019; EN IEC 61000-6-2:2019; EN IEC 61000-6-3:2021; EN IEC 61000-6-4:2019; EN IEC 63000:2018;

WILO SE
Group Quality
Wilopark 1

Persoana autorizată sa compileze dosarul tehnic este: D-44263 Dortmund

SK — **Oficiálny preklad vyhlásenia**

My, výrobca, na vlastnú zodpovednosť vyhlasujeme, že tieto bezucpávkové obehové čerpadlá radu,
(Sériové číslo je uvedené na štítku s výrobkom) **Yonos PICO -Z...**
v dodanom stave zodpovedajú nasledujúcim relevantným smerniciam a príslušným národným právnym predpisom:

|| 2014/35/EU - Nízkonapäťové zariadenia || 2014/30/EU - Elektromagnetickú Kompatibilitu || 2011/65/EU + 2015/863 - obmedzení používania určitých nebezpečných látok

spĺňať aj nasledujúce relevantné normy:
EN 60335-1:2012+A11:2014+A13:2017+A1:2019+A2:2019+A14:2019+A15:2021; EN 60335-2-51:2003+A1:2008+A2:2012; EN IEC 61000-6-1:2019; EN IEC 61000-6-2:2019; EN IEC 61000-6-3:2021; EN IEC 61000-6-4:2019; EN IEC 63000:2018;

WILO SE
Group Quality
Wilopark 1

Osoba oprávnená zostaviť technickú dokumentáciu je: D-44263 Dortmund

SL — **Uradni prevod izjave**

Mi, kot proizvajalci, z polno odgovornostjo izjavljamo, da te vrste obtočnih črpalk brez žleze serije,
(Serijska številka je označena na napisni tablici izdelka) **Yonos PICO -Z...**
v stanju dostave ravnajo v skladu z naslednjimi ustreznimi direktivami in ustrezno nacionalno zakonodajo:

|| 2014/35/EU - Nizka Napetost || 2014/30/EU - Elektromagnetno Združljivostjo || 2011/65/EU + 2015/863 - o omejevanju uporabe nekaterih nevarnih snovi

izpolnjujejo tudi naslednje ustrezne standarde:
EN 60335-1:2012+A11:2014+A13:2017+A1:2019+A2:2019+A14:2019+A15:2021; EN 60335-2-51:2003+A1:2008+A2:2012; EN IEC 61000-6-1:2019; EN IEC 61000-6-2:2019; EN IEC 61000-6-3:2021; EN IEC 61000-6-4:2019; EN IEC 63000:2018;

WILO SE
Group Quality
Wilopark 1

Oseba, pooblaščena za sestavo tehnične datoteke, je: D-44263 Dortmund

TR — **CE Uygunluk Beyanı**

Biz üretici olarak, sirkülasyon pompa tip serilerinin tamamen kendi sorumluluğumuz altında olduğunu beyan ederiz.
Seri numarası ürünün üzerindedir. **Yonos PICO -Z...**
teslim edildiği şekliyle aşağıdaki ilgili hükümler ile uyumludur;

|| 2014/35/EU - Alçak Gerilim Yönetmeliği || 2014/30/EU - Elektromanyetik Uyumluluk Yönetmeliği || 2011/65/EU + 2015/863 - Belirli tehlikeli maddelerin bir kullanımını sınırlandıran

İlgili uyumlaştırılmış Avrupa standartları;
EN 60335-1:2012+A11:2014+A13:2017+A1:2019+A2:2019+A14:2019+A15:2021; EN 60335-2-51:2003+A1:2008+A2:2012; EN IEC 61000-6-1:2019; EN IEC 61000-6-2:2019; EN IEC 61000-6-3:2021; EN IEC 61000-6-4:2019; EN IEC 63000:2018;

WILO SE
Group Quality
Wilopark 1

Teknik dosyayı düzenleyen yetkili kişi; D-44263 Dortmund

MT — **Traduzzjoni uffiċjali tad-Dikjarazzjoni**

Aħna, il-manifattur, niddikjaraw taħt ir-responsabbiltà unika tagħna li dawn it-tipi ta 'pompa ċirkolanti mingħajr glandola tas-serje,
(In-numru tas-serje huwa mmarkat fuq il-pjanċa tas-sit tal-prodott) **Yonos PICO -Z...**
fl-istat mogħtija tagħhom jikkonformaw mad-direttivi rilevanti li ġejjin u mal-leġislazzjoni nazzjonali relevanti:

|| 2014/35/EU - Vultaġġ Baxx || 2014/30/EU - Kompatibbiltà Elettromanjetika || 2011/65/EU + 2015/863 - dwar ir-restrizzjoni tal-użu ta' ċerti sustanzi perikoluži

jikkonformaw ukoll mal-istandards rilevanti li ġejjin:
EN 60335-1:2012+A11:2014+A13:2017+A1:2019+A2:2019+A14:2019+A15:2021; EN 60335-2-51:2003+A1:2008+A2:2012; EN IEC 61000-6-1:2019; EN IEC 61000-6-2:2019; EN IEC 61000-6-3:2021; EN IEC 61000-6-4:2019; EN IEC 63000:2018;

WILO SE
Group Quality
Wilopark 1

Persuna awtorizzata biex tiġbor il-fajl tekniku hija: D-44263 Dortmund







wilo

Pioneering for You



Local contact at
www.wilo.com/contact

WILO SE
Wilopark 1
44263 Dortmund
Germany
T +49 (0)231 4102-0
T +49 (0)231 4102-7363
wilo@wilo.com
www.wilo.com