Pioneering for You

Wilo-Stratos PICO-Z



COMPATIBLE

en Installation and operating instructions

4258257 • Ed.01/2023-02



Table of contents

1 General information 4
1.1 About these instructions 4
1.2 Copyright 4
1.3 Subject to change 4

2 Safety 4
2.1 Identification of safety instructions 4
2.2 Personnel qualifications 5
2.3 Electrical work 5
2.4 Operator responsibilities 5

3 Description of the pump 5
3.1 Overview 6
3.2 Type key 6
3.3 Technical data 6

4 Application/use 7
4.1 Intended use 7
4.2 Misuse 7

5 Transportation and storage 7
5.1 Scope of delivery 7
5.2 Transport inspection 7
5.3 Transport and storage conditions 7

6 Installation and electrical connection 7
6.1 Installation 8
6.2 Electrical connection 10

7 Pump operation 11
7.1 Initial commissioning 12
7.2 Home screen 13
7.3 Menu structure 14

8 Commissioning 15
8.1 Venting 15
8.2 Setting the regulation mode 16
8.3 Device setting 17
8.4 Maintenance 18

9 Shutdown 19
9.1 Shutting down the pump 19

10 Maintenance 19

11 Faults, causes and remedies 20
11.1 Warning messages 21
11.2 Error messages 22

12 Accessories 22
12.1 Wilo-Connect module 22
12.2 Smart Connect Module BT (Bluetooth) 24

13 Disposal 24
13.1 Information on the collection of used electrical and electronic products 24

1 General information

1.1 About these instructions

These instructions form part of the product. Compliance with the instructions is essential for correct handling and use:

- → Read the instructions carefully before all activities.
- → Keep the instructions in an accessible place at all times.
- → Observe all product specifications.
- → Observe the markings on the product.

The language of the original operating instructions is German. All other languages of these instructions are translations of the original operating instructions.

1.2 Copyright

WILO SE © 2023

The reproduction, distribution and utilization of this document as well as the communication of its contents to others without express authorization is prohibited. Offenders will be held liable for the payment of damages. All rights reserved.

1.3 Subject to change

Wilo shall reserve the right to change the listed data without notice and shall not be liable for technical inaccuracies and/or omissions. The illustrations used may differ from the original and are intended as an example representation of the device.

2 Safety

This chapter contains basic instructions for the individual life cycles of the product. Failure to observe this information carries the following risks:

- → Danger to persons from electrical, mechanical and bacteriological effects as well as electromagnetic fields
- → Environmental damage from discharge of hazardous substances
- → Damage to property
- → Failure of important product functions
- → Failure of required maintenance and repair procedures

Failure to observe the instructions will result in the loss of any claims for damages.

The directions and safety instructions in the other sections must also be observed!

2.1 Identification of safety instructions

These installation and operating instructions set out safety instructions for preventing personal injury and damage to property, which are displayed in different ways:

- → Safety instructions relating to personal injury start with a signal word and are **preceded by a corresponding symbol**.
- → Safety instructions relating to property damage start with a signal word and are displayed **without** a symbol.

Signal words

- → **DANGER!**
  Failure to follow the instructions will result in serious injury or death!
- → **WARNING!**
  Failure to follow instructions can lead to (serious) injury!
- → **CAUTION!**
  Failure to follow instructions can lead to property damage and possible total loss.
- → **NOTICE!**
  Useful information on handling the product

Symbols

These instructions use the following symbols:


General danger symbol


Danger of electric voltage


Warning of hot surfaces


Warning of magnetic fields


Notices

2.2 Personnel qualifications

Personnel must:

- → Be instructed about locally applicable regulations governing accident prevention.
- → Have read and understood the installation and operating instructions.

Personnel must have the following qualifications:

- → Electrical work: Electrical work must be performed by a qualified electrician.
- → Installation/dismantling work: The installation/dismantling must be carried out by a qualified technician who is trained in the use of the necessary tools and fixation materials.
- → The product must be operated by persons who are instructed on how the complete system functions.

Definition of "qualified electrician"

A qualified electrician is a person with appropriate technical education, knowledge and experience who can identify **and** prevent electrical hazards.

2.3 Electrical work

- → Electrical work must be performed by a qualified electrician.
- → Nationally applicable guidelines, standards and regulations as well as specifications issued by the local energy supply companies for connection to the local power supply system must be observed.
- → Before commencing work, disconnect the product from the mains and secure it against being switched on again.
- → The connection must be secured by means of a residual-current device (RCD).
- → The product must be earthed.
- → Have defective cables replaced immediately by a qualified electrician.
- → Never open the control module and never remove operating elements.

2.4 Operator responsibilities

- → Have all work carried out by qualified personnel only.
- → Ensure on-site guard against hot components and electrical hazards.
- → Have defective gaskets and connection pipes replaced.

This device can be used by children from 8 years of age as well as people with reduced physical, sensory or mental capacities or lack of experience and knowledge if they are supervised or instructed on the safe use of the device and they understand the dangers that can occur. Children are not allowed to play with the device. Cleaning and user maintenance must not be carried out by children without supervision.

3 Description of the pump

High-efficiency circulator for drinking water systems with integrated differential pressure control. Control mode and delivery head (differential pressure) are adjustable. The differential pressure is controlled via the pump speed. For all control functions, the pump continuously adapts to the system's changing power requirements.

Optionally, the pump can be set or controlled via an external module (e.g. Bluetooth). The connection is made via a slot ("Wilo-Connectivity Interface") above the control module.

3.1 Overview

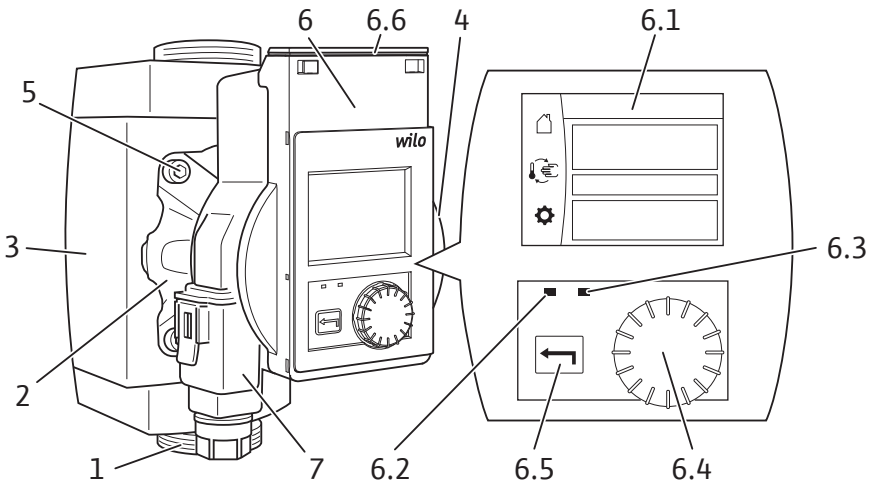

Fig. 1: Overview

Item	Name	Explanation
1.	Pump housing	with screwed connections
2.	Glandless motor	Drive unit
3.	Thermal insulation shell	2 half shells
4.	Rating plate	
5.	Housing screws	4 pieces for motor fixation
6.	Control module	Electronic unit with graphic display
6.1	Graphic display	→ Self-explanatory user interface for setting the pump. → Provides information about settings and pump status.
6.2	Blue LED indicator	Lights up in connection with an external module (e.g. Bluetooth).
6.3	Green LED indicator	Lights up when the motor is running, goes out as soon as the motor stops.
6.4	Operating button	Turn: selecting the menu and adjusting parameters. Press: selecting the menus or confirming entered parameters.
6.5	Back button	Press: back to the previous menu level.
6.6	Wilo-Connectivity Interface	Slot for external modules (below the lockable module cover)
7.	Wilo-Connector	Electrical mains connection

3.2 Type key

Example: Stratos PICO-Z 25/0.5-6	
Stratos PICO	High-efficiency pump
-Z	Circulator for drinking water systems
25	Nominal diameter of screwed connection: 20 (G 1¼), 25 (G 1½), 30 (G 2)
0.5-6	0.5 = minimum delivery head in m 6 = maximum delivery head in m at Q = 0 m³/h

3.3 Technical data

Connection voltage	1 ~ 230 V ± 10 %, 50/60 Hz
Protection class IP	See rating plate (4)

Fluid temperatures at max. ambient temperature +40 °C	+2 °C to +95 °C
Permitted ambient temperature	-10 °C to +40 °C
Max. operating pressure	10 bar (1000 kPa)
Minimum inlet pressure at +95 °C	0.3 bar (30 kPa)

4 Application/use

4.1 Intended use

High-efficiency circulators from this series are only used for pumping drinking water in recirculation loop systems in industry and building services.

These pumps are specially adapted to the operating conditions in domestic hot water circulation systems through the selection of materials and their design, taking into account the guidelines of the German Environment Agency (UBA).

Permitted fluids:

- Drinking water according to EC Drinking Water Directive.
- Clean, non-aggressive, low-viscosity fluids in accordance with national drinking water provisions.

Regulations:

The current editions of the following regulations must be observed during installation:

- Accident prevention regulations
- DIN EN 806-5
- DVGW worksheet W551 and W553 (in Germany)
- VDE 0700/Part 1 (EN 60335-1)
- More local regulations

4.2 Misuse

The operational reliability of the supplied product is only guaranteed for intended use. The values must never fall below or exceed the limit values specified in the catalogue/data sheet.
Misuse of the pump can lead to dangerous situations and damage:

- Never use non-specified fluids.
- Highly flammable materials/fluids should always be kept at a safe distance from the product.
- Never allow unauthorised persons to carry out work.
- Never operate the pump beyond the specified limits of use.
- Never carry out unauthorised conversions.
- Never operate with phase angle control.
- Use authorised Wilo accessories and genuine spare parts only.

Intended use also includes observing these instructions and the specifications and markings on the pump.

Any use beyond the intended use is considered misuse and will void any warranty claims.

5 Transportation and storage

5.1 Scope of delivery

- High-efficiency circulator
- Thermal insulation shell
- 2 gaskets
- Wilo-Connector
- Installation and operating instructions

5.2 Transport inspection

Check delivery immediately for damage and completeness. Where necessary make a complaint immediately.

5.3 Transport and storage conditions

Protect against moisture, frost and mechanical loads.
Permissible temperature range: -10 °C to +40 °C

6 Installation and electrical connection



DANGER

Risk of fatal injury!

Incorrect installation and improper electrical connections can be life-threatening.

- Installation and electrical connection only by qualified personnel.
- Carry out work in accordance with locally applicable regulations.
- Adhere to accident prevention regulations.

6.1 Installation



WARNING

Risk of burns from hot surfaces!

Pump housing and glandless motor may become hot and cause burns if touched.

- During operation only touch the control module.
- Allow the pump to cool down before commencing any work.



WARNING

Risk of scalding from hot fluids!

Hot fluids can cause scalding.
Before the installation or removal of the pump or the dismantling of the housing screws, observe the following:

- Allow the drinking water system to cool down completely.
- Close shut-off valves or drain the drinking water system.

6.1.1 Preparation

CAUTION

An incorrect installation position may damage the pump.

- Select the installation point according to the permitted installation position (Fig. 2).
- The motor must always be installed horizontally.
- The electrical connection must never face upwards.

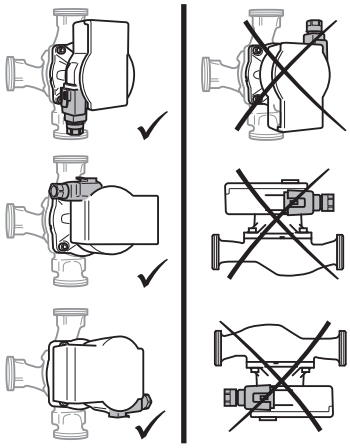

Fig. 2: Installation positions

NOTICE! Install the pump in the return to ensure the temperature-controlled mode functions smoothly.

→ Choose an installation point that is easily accessible.
→ Observe the pump's allowable installation position (Fig. 2), rotate the motor head (2 + 6) if necessary.
→ Install shut-off valves upstream and downstream of the pump to facilitate pump replacement.
CAUTION! Leaking water can damage the control module!
Align the upper shut-off valve on the side so that leaking water cannot drip onto the control module (6).
→ Provide non-return valves.
→ Complete all welding and soldering processes.
→ Flush the pipeline system.

6.1.2 Rotating the motor head



WARNING

Risk of fatal injury from magnetic field!

Highly magnetic components are fitted inside the pump; they can cause fatal injury to people with medical implants if the pump is dismantled.

- Never remove the rotor.

Rotate the motor head (Fig. 3) before installing and connecting the pump.

→ If necessary, remove the thermal insulation shell.
→ Hold the motor head (2+6) and unscrew the 4 housing screws (5).
CAUTION! Damage to the inner gasket causes leakage.
Carefully rotate the motor head without removing it from the pump housing.
→ Carefully rotate the motor head (2+6).
→ Observe the permitted installation position (Fig. 2) and the direction of flow arrow on the pump housing (1).
→ Tighten the 4 housing screws (5).

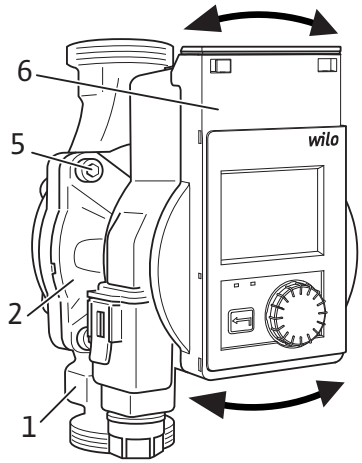

Fig. 3: Rotating the motor head

6.1.3 Installing the pump

CAUTION

Corrosion damage!

Incorrect materials can cause corrosion damage to the pump.

- When connecting to galvanised piping, only use red-brass screwed connections.

Observe the following points when installing the pump:

→ Note the direction of flow arrow on the pump housing (1).
→ Install with horizontal glandless motor (2), without mechanical tension.
→ Place gaskets in the screwed connections.
→ Screw on threaded pipe unions.
→ Use an open-end wrench to secure the pump against twisting and screw tightly to piping.
→ Re-mount the thermal insulation shell if required.

CAUTION! Insufficient heat dissipation and condensate may damage the control module and glandless motor.
• Glandless motor (2) not heat insulating.
• Leave all condensate drain openings (3) free.

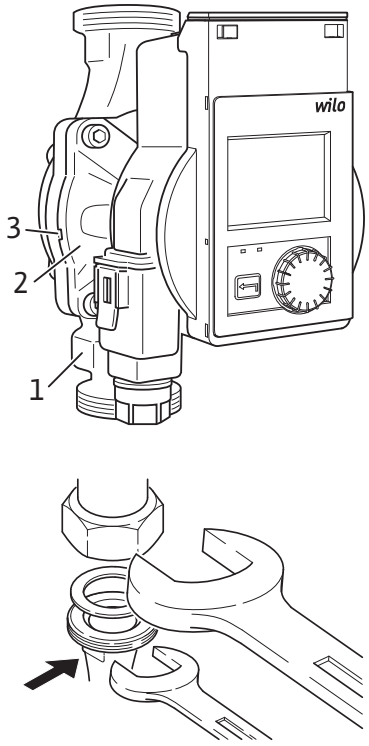

Fig. 4: Installing the pump

6.2 Electrical connection



DANGER

Risk of fatal injury from electrical voltage!

Immediate risk of fatal injury if live components are touched.

- Before commencing work, switch off the power supply and secure it from being switched on again.
- Never open the control module and never remove operating elements.

CAUTION

Pulsed mains voltage can cause damage to electronic components!

- Never operate the pump with phase angle control.
- When switching the pump on or off using an external control unit, deactivate any voltage pulse (e.g. phase angle control).
- For applications where it is not clear whether the pump is operated with pulsed voltage, get the control/system manufacturer to confirm that the pump is operated with sinusoidal AC voltage.
- Switching the pump on/off via triacs/solid-state relays must be examined on a case-by-case basis.

6.2.1 Preparation

→ The current type and voltage must correspond to the specifications on the rating plate.
→ Provide maximum back-up fuse: 10 A, slow-blow.
→ If a residual-current device (RCD) is used, it is recommended to use an RCD type A (pulse current sensitive). Check that the rules for the coordination of electrical equipment in the electrical installation are observed and, if necessary, adjust the RCD accordingly.
→ Only operate the pump with sinusoidal AC voltage.
→ Observe the switching frequency:
  – Switch-on/off procedures via mains voltage ≤ 100/24 h.
  – ≤ 20/h for a switching frequency of 1 min. between switching on/off via mains voltage.



NOTICE

The inrush current of the pump is < 5 A. If the pump is switched “on” and “off” via a relay, it must be ensured that the relay is capable of switching an inrush current of at least 5 A. If necessary, obtain information from the boiler/control unit manufacturer.

→ The electrical connection must be made via a fixed connecting cable equipped with a connector device or an all-pole switch with a contact opening width of at least 3 mm (DIN EN 60335-1).
→ Use a connecting cable with sufficient outer diameter (e.g. H05VV-F3G1.5) to protect against leaking water and to ensure strain relief on the threaded cable connection.
→ Use a heat-resistant connecting cable where fluid temperatures exceed 90 °C.
→ Ensure that the connecting cable does not touch the pipes or the pump.

6.2.2 Connecting the pump

Installing the Wilo-Connector

→ Disconnect the connecting cable from the power supply.
→ Observe the terminal assignment (PE, N, L).
→ Connect and install the Wilo-Connector (Fig. 5a to 5e).

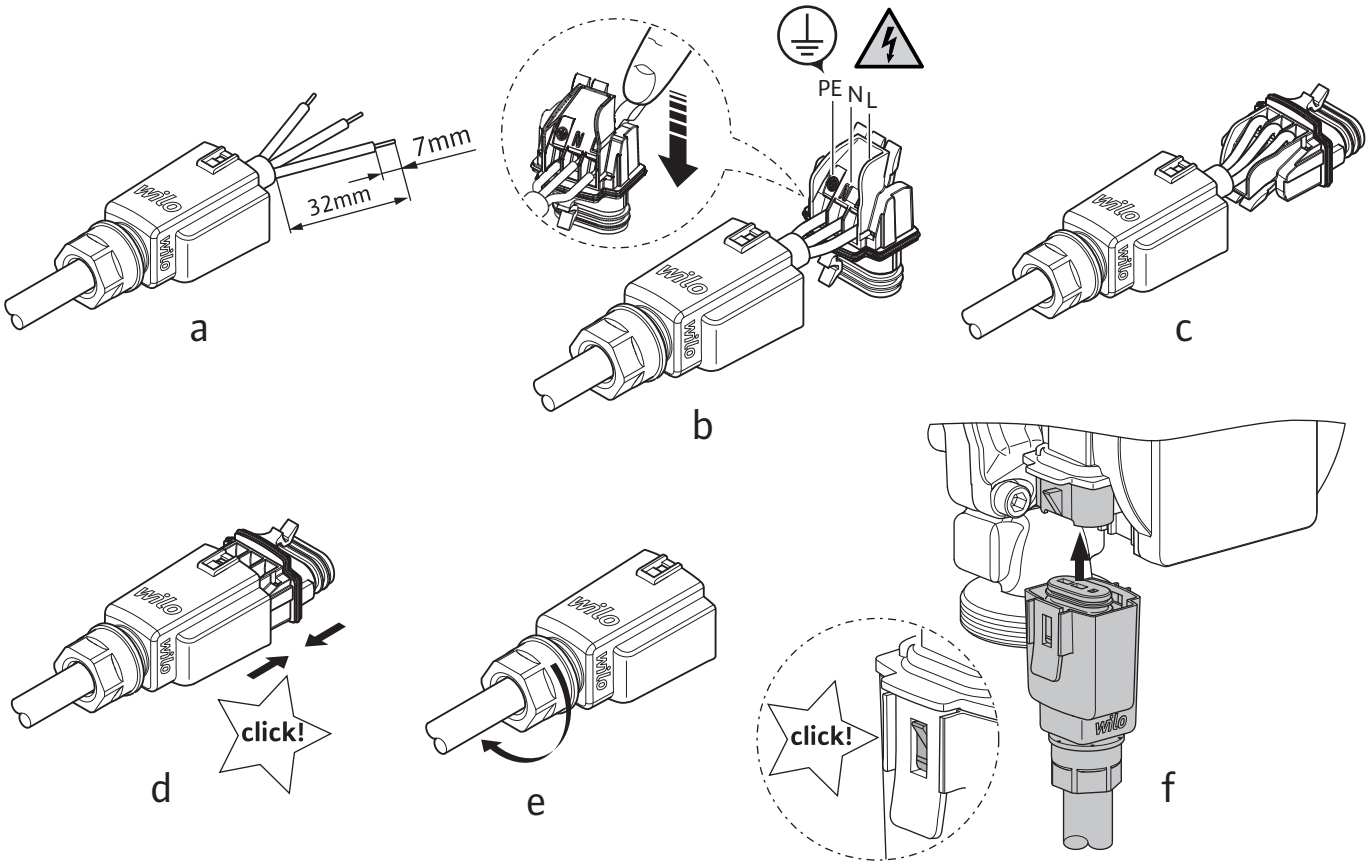

Fig. 5: Installing the Wilo-Connector

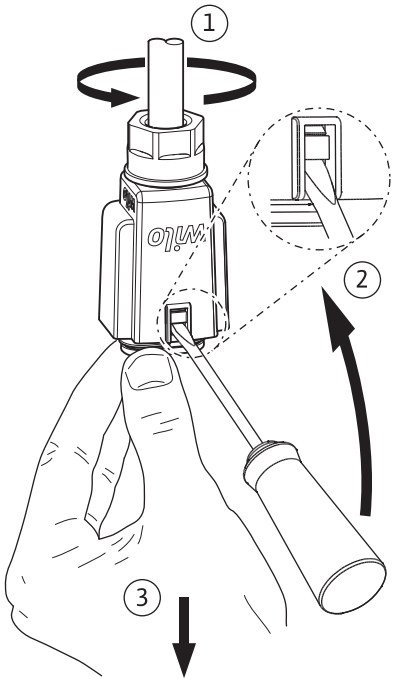

Fig. 6: Removing the Wilo-Connector

Connecting the pump

→ Earth the pump.
→ Connect the Wilo-Connector to the control module until it snaps into place (Fig. 5f).
→ Activate the power supply.

Removing the Wilo-Connector

→ Disconnect the connecting cable from the power supply.
→ Remove the Wilo-Connector from the pump using a suitable screwdriver (Fig. 6).

7 Pump operation

Operating button

Carry out settings by turning and pressing the operating button.

Turn: selecting the menu and adjusting parameters.

Press: selecting the menus or confirming entered parameters.

→ A green focus on the display indicates navigation in the selected menu.
→ A yellow frame indicates the possibility of a setting.

Back button

Press: back to the previous menu level.

Press (>2 seconds): back to the main menu (home screen).

NOTICE

If there is no warning or error message, the display will switch off 2 minutes after the last time it was operated.

- If the operating button is confirmed within 7 minutes, the previously exited menu will appear. You can continue to configure settings.
- If the operating button is not confirmed for more than 7 minutes, any unconfirmed settings will be lost.
  Pressing the button again opens the home screen on the display and the pump can be operated from the main menu.

7.1 Initial commissioning

The language selection menu will appear in the display during initial commissioning of the pump.

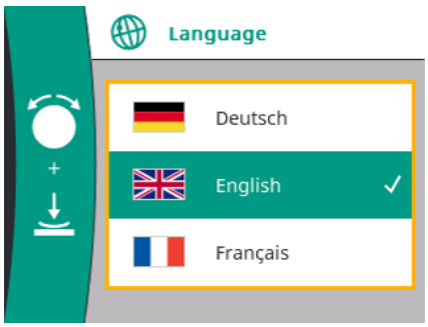

The pump runs in factory setting when the language selection menu is open.

Select language +

Set language ✓

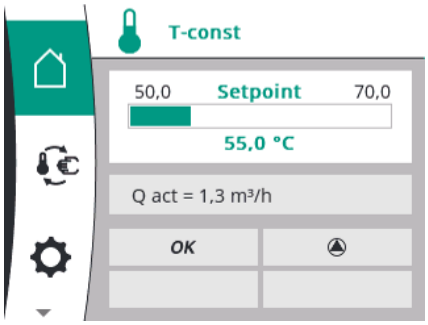

After selecting the language, the display changes to the home screen (factory setting = T-const) and the pump can be operated via the main menu

7.2 Home screen

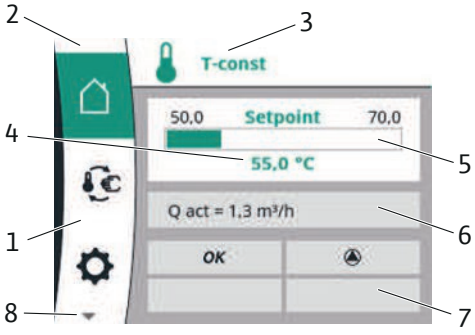

Fig. 7: Home screen

The home screen shows the current settings/statuses of the pump in operation (example setting).

Item	Name	Explanation
1.	Main menu overview	Selection of different main menus
2.	Status area: error, warning or process information display	Colours indicate the current status of the pump. → Blue: a process in progress (e.g. venting) → Yellow: warning (e.g. excessive module temperature) → Red: error (e.g. short-circuit) → White: normal operation
3.	Title bar	Displays set control mode
4.	Setpoint display field	Displays currently configured setpoints
5.	Setpoint editor	The setpoint editor is activated by pressing the operating button (yellow frame) and a value change is possible by turning the operating button. Press again to confirm the value.
6.	Operating data and measurement area	Time-changing display of current operating data and measured values → Delivery head H [m] → Volume flow [m³/h] → Speed n [rpm] → Power consumption P [W] → Energy consumption W [kWh], cumulative since commissioning or resetting → Fluid temperature T [°C] The units can be changed via the device settings.
7.	Active influences	Display of influences on the set control mode (see "Active influences" table)
8.	▼ = more menus available	Other main menu items are available by turning the operating button.

7.2.1 Status area (2)

The **status area** (2) is located on the left side above the main menu area.
When a status is active, status menu items can be displayed and selected in the main menu.
Turning the operating button to the status area will display the active status.

If an active process (e.g. venting process) is quit or discarded, the status display is hidden again.

There are three different classes of status displays:

1. Display process:

   Running processes are marked in blue.
   Processes cause the pump operation to deviate from the set control. Example: venting process

2. Display warning:

   Warning messages are marked in yellow.
   The function of the pump is restricted when there is a warning (see under "11.1 Warning messages"). Example: excessive module temperature.

3. Display error:

   Error messages are marked in red.
   If there is a fault, the pumps stops operating (see under "11.2 Error message"). Example: short-circuit.

NOTICE

Only one process can be active at a time.

- Any set regulation mode is interrupted while a process is running.
- After completing the process, the pump continues to run in the set regulation mode.
- You can already make additional settings at the pump during the process. These settings become active when the process is completed.

7.2.2 Active influences (7)

In the **active influences** range, influences that currently influence the pump are displayed.
Possible active influences:

Symbol	Meaning
STOP	Pump has detected an error and switched off the motor as a result.
	Pump is venting and not controlling as per adjusted control function.
	Pump is carrying out a manual restart and not controlling as per adjusted control function.
	There is a warning or error message.
OFF	Pump is switched off by an external module.
	Thermal disinfection was detected. Pump is running at a slightly higher speed.
OK	Pump is running in the configured control mode without additional influences.
	The motor is running.
	The motor does not start.
	Pump supplying within maximum characteristic curve range.

7.3 Menu structure

After quitting the language selection menu, all operations are initiated from the main menu on the “home screen”. In this process, the current operating focus has been highlighted in green. Turn the operating button to the left or right to focus on a different main menu.

→ The corresponding submenu for each selected main menu is displayed.
Press the operating button to change the focus to the corresponding submenu.
→ Each submenu contains further sub-menu items.
Each sub-menu item consists of an icon and a title.
→ The title names another sub-menu or a subsequent settings dialogue.

Menu selection	Possible settings
 **Home screen**	Setpoint
 **Pump setting**	
 Control mode	
 T-const	

Δp-c	
Speed n-const	
Setpoint T-const	T set = 50 ... 70 °C
Setpoint Δp-c	H set = 0.5 ... 4, 6, 8 m
Setpoint n-const	Speed I, Speed II, Speed III
Setpoint Q min	Q min set = 0.0 ... 2.0 m³/h (4m) Q min set = 0.0 ... 3.0 m³/h (6m) Q min set = 0.0 ... 4.0 m³/h (8m)
Thermal disinfection	ON/OFF

Device setting

Brightness	1 ... 100 %
Language	Deutsch, English, Français
Units	m, m³/h; kPa, m³/h; kPa, l/s; ft, USGPM
Key lock	Key lock ON/Cancel
Factory setting	Factory setting/Cancel

External module (see Chapter 12)

Maintenance

Pump venting	Pump venting ON/Stop
Manual restart	Manual restart ON/Stop
Key lock	Key lock ON/Cancel
Reset energy counter	Reset energy counter/Cancel
Installer contact	Name: / Phone:

8 Commissioning

8.1 Venting

Fill and vent the system correctly.

→ The pump rotor chamber normally vents automatically after a short time in operation.

→ If the pump does not vent automatically, start a pump venting function (see menu description: 8.4 “Maintenance”).

8.2 Setting the regulation mode

Select **“Pump setting”** in the main menu.

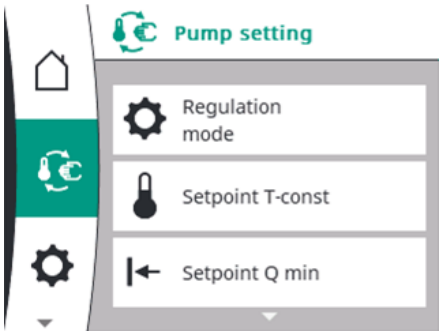

In this menu, settings are made to control the pump.

Control mode

Temperature constant (T-const = factory setting)

The speed is controlled depending on the water temperature so that the circulation temperature is always kept above a preset minimum temperature.

The pump also maintains the set minimum flow, if the temperature control were to reduce the pump's flow below the set minimum.

Recommendation: Set T min 5 °C lower than the temperature of the heat generator (unless alternative installation instructions are available).

Constant differential pressure (Δp-c)

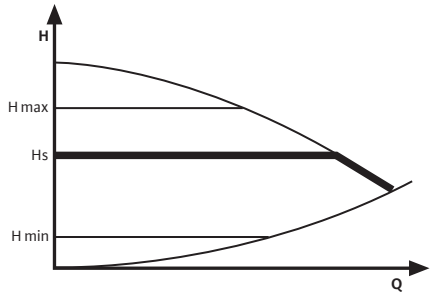

The control keeps the set delivery head constant at the set differential pressure setpoint Hs.

Recommended for systems with balancing valves.

Speed constant (n-const)

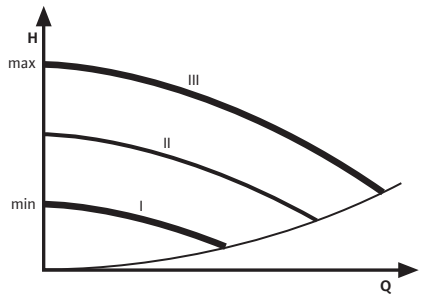

The pump runs uncontrolled in three prescribed fixed speed stages.

Recommended for systems with fixed system resistance requiring a constant volume flow or with systems with balancing valves.

Set setpoint

Corresponding setpoints can be set for the control modes.

Confirm and set selected value.

Control mode	Possible setpoints

	Setpoint T-const	Temperature T set = 50 ... 70 °C (factory setting: 55 °C)
	Setpoint Δp-c	Delivery head: H set = 0.5 ... 4, 6, 8 m (depending on the type)
	Setpoint n-const	Speed: speed I, speed II, speed III
	Press (2 seconds): the display shows the corresponding home screen with the setpoint adjusted.	



Setpoint Qmin

A minimum flow can also be set for the T-const control mode.

The pump regulates the speed so that the set minimum flow is maintained up to the maximum delivery head. This prevents stagnation and legionella from forming in the piping.

The following table shows the recommended minimum flow depending on the pipe diameter per line to ensure a flow velocity of 0.2 m/s per line:

Pipe diameter [mm]	14	16	20	26	33	40
Minimum flow per line [m³/h]	0.11	0.14	0.23	0.38	0.62	0.90

To set the minimum flow at the pump, multiply the number of ascending lines by the “minimum flow per line”.
Factory setting: Qmin = 0.0 m³/h



Thermal disinfection

During thermal disinfection, the heat generator periodically heats itself and the drinking water storage tank. The pump recognises this automatically after 24 uninterrupted hours of operation by a temperature increase of at least 5 °C compared to the learned maximum temperature.

During thermal disinfection, the pump runs at a slightly increased speed.
The maximum running time for thermal disinfection is 4 h, followed by a lock time of 3 h, where no new start is possible.

Thermal disinfection can be activated (ON) or deactivated (OFF).
Factory setting: Thermal disinfection OFF



NOTICE

After activating the pump or changing the parameters, thermal disinfection can only be detected after 24 operating hours.
Unless a temperature of 70 °C is exceeded. In this case, thermal disinfection is always activated in advance.



NOTICE

All settings and displays are retained if the power supply is interrupted.

8.3 Device setting



Select **“Device setting”** in the main menu.

General settings are made under “Device setting”.



Brightness

The value of the display brightness is given as a percentage:

- → 1 % = minimum brightness
- → 100 % = maximum brightness (factory setting)

Language

The pump has the following display languages:

- German
- English (factory setting)
- French

During initial commissioning, the language must first be set via the language selection menu.

Units

The following units can be set for the delivery head and the volume flow.

- Delivery head in m, volume flow in m^3/h (factory setting)
- Delivery head in kPa, volume flow in m^3/h
- Delivery head in kPa, volume flow in l/s
- Delivery head in ft, volume flow in USGPM (US units)

Key lock

The key lock locks the settings and protects against unintentional or unauthorised adjustment of the pump. The key lock is activated in the selection field via “Key lock ON”, the process is terminated via “Cancel”. Alternatively, the key lock can be activated at any time by pressing the operating button for a long time (5 seconds). The display changes to the home screen:

Key lock is activated, settings can no longer be made. If the button is pressed, “Locked” appears on the display.

The key lock is deactivated by pressing the operating button for a long time (5 seconds), the lock symbol in the main menu goes out.

NOTICE

Key lock is not deactivated by switching off the pump.

The power consumption meter cannot be reset to the factory settings when key lock is activated, among other things. Key lock is not activated automatically, e.g. after a set period of time has passed.

Factory setting

The pump can be reset to factory settings.

Activate “Factory setting” in the selection field and terminate the process via “Cancel”.

NOTICE

Resetting pump settings to the factory setting replaces the current pump settings.

This does not reset the power consumption meter or contact data stored on the pump.

8.4 Maintenance

Select **“Maintenance”** in the main menu.

Functions and settings that are useful for commissioning or maintenance are available under the “Maintenance” main menu item.

Pump venting

The pump venting is activated via the selection field “Pump venting ON”.
The pump rotor chamber is automatically vented.
The status display for the venting process appears blue in the upper main menu area of the pump.

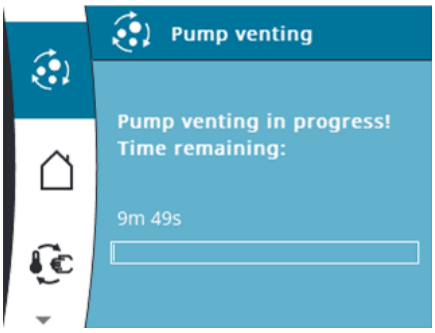

Press (2 seconds):
the display shows the status of the venting routine.

→ The duration of the venting routine is 10 minutes; it is shown with a countdown in the status display.
→ Noises may be heard during the venting routine.
→ The pump then automatically switches back to the set control.

If desired, the process can be stopped via the submenu “Pump venting” (the status display goes out).

NOTICE

The pump venting function removes accumulated air from the pump rotor chamber. The domestic hot water circulation system is not vented using the pump venting function.

Manual restart

If the “Manual restart ON” button is selected, the pump deblocks if necessary.
The status display for the manual restart appears blue in the upper main menu area of the pump.

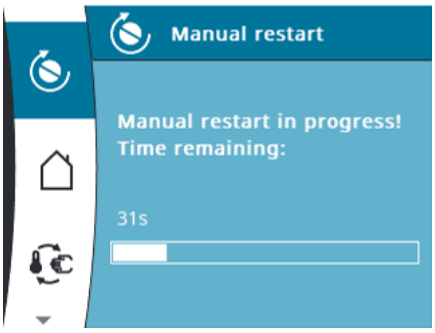

Press (2 seconds):
the display shows the status of the manual restart.

→ The duration of the deblocking at most 10 minutes, but at least 40 seconds and is indicated with a countdown in the status display.
→ After a successful restart, the pump automatically switches back to the set control.

If desired, the process can be stopped via the “manual restart” sub-menu (the status display goes out).

NOTICE

The pump can only run one process at a time. For example, if the venting process is running, the manual restart cannot be selected.

Reset energy counter

In the operating data and measured values area, the power consumption is displayed in kWh (cumulative since commissioning).
In this menu, if necessary, the value can be reset to zero via the selection field “Reset energy counter”. Selecting “Cancel” does not reset the energy counter.

Installer contact

The contact details of the installer are displayed here.
In the event of a fault, these contact details also appear on the pump screen every 5 seconds.

The contact data can only be saved and updated via the “Smart Connect” function in the Wilo-Assistant app on the pump. To establish the connection, the “Wilo-Smart Connect Module BT” (accessory) is required (see Chapter 12.2).

9 Shutdown

9.1 Shutting down the pump

Shut down the pump immediately if the connecting cable or other electrical components are damaged.

→ Disconnect the pump from the power supply.
→ Contact Wilo customer service or a specialist technician.

10 Maintenance

No special maintenance is required during operation.

→ Under the “Maintenance” main menu item, functions are available that are useful for maintenance.
→ Carefully remove dirt from the pump on a regular basis using a dry duster.
→ Never use liquids or aggressive cleaning agents.

11 Faults, causes and remedies



DANGER

Risk of fatal electrical shock!

Ensure there are no risks arising from electrical current!

- The pump must be voltage-free and secured against unauthorised reactivation prior to any repair work.
- Damage to the mains connecting cables should always be repaired by a qualified electrician only.



WARNING

Risk of scalding!

At high fluid temperatures and system pressures, allow the pump to cool down first and then depressurise the system.

If fault messages appear in the display, the fault management still provides feasible pump output and functionalities.
A fault that has occurred is persistently checked. Regular operation will be restored if possible.
The fault-free pump operation is resumed when the cause of the fault is no longer present. Example: The control module has once again cooled down.

If a fault exists, the display is permanently on and the green LED indicator is off.

Faults	Causes	Remedies
Pump is not running with switched-on power supply.	Electric fuse defective.	Check the fuse protection.
Pump is not running with switched-on power supply.	Pump has no voltage.	Reconnect the voltage.
Pump runs, there is no circulation.	Circulation piping not filled/not vented.	Circulation piping filled and vented.
Pump makes noises.	Cavitation due to insufficient suction pressure.	Increase the system pressure within the permissible range.
Pump makes noises.	Cavitation due to insufficient suction pressure.	Check the delivery head setting and set it to a lower head if necessary.
Pump does not reach the set minimum temperature.	Storage tank temperature too low.	Check the storage tank temperature and increase it if necessary.
Pump does not reach the set minimum temperature.	Taps open.	Close the taps and check whether the pump then reaches the minimum temperature.
Pump does not reach the set minimum temperature.	Cold water flows into the circulation pipe.	Install non-return valves.
Pump does not reach the set minimum temperature.	Excessive heat loss due to inadequately insulated piping.	Insulate piping or check thermal insulation.

Faults	Causes	Remedies
The display shows an actual temperature that is much higher than the set minimum temperature.	The temperature at the heat generator is too high compared to the set minimum temperature at the pump.	Adjust the settings of the heat generator and the pump.
The display shows an actual temperature that is much higher than the set minimum temperature.	The set minimum flow has priority over the set minimum temperature and prevents the pump from running slower.	Check the set minimum flow.
The pump does not maintain the set minimum flow.	The pipeline is partially or completely shut off.	Open the valves in the piping.
The pump does not maintain the set minimum flow.	Piping undersized.	Re-lay piping.
The pump does not maintain the set minimum flow.	Taps open.	Close the taps and check whether the pump then reaches the minimum flow.
The pump does not maintain the set minimum flow.	Cold water flows into the circulation pipe.	Install non-return valves.
The pump does not recognise thermal disinfection.	The self-learning phase of the pump (uninterrupted 24 operating hours) was not observed.	Activate thermal disinfection and observe self-learning phase.

11.1 Warning messages

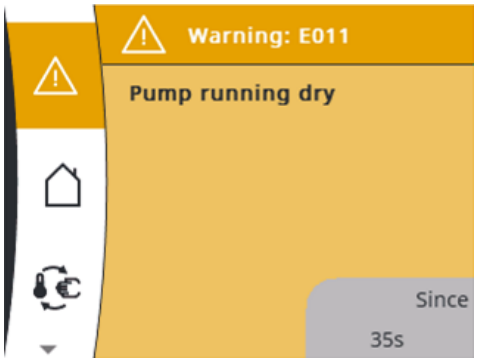

A warning message is shown in yellow via the status display.

Press (2 seconds):
the display shows the status of the warning message.

- → The display shows the code, the description of the warning message and how long the fault has existed for.
- → The pump may continue to run with limited output.
- → The indicated faulty operating status must not occur for a prolonged period.
- → Remove cause of fault.

Code	Faults	Causes	Remedies
E002	Water temperature too low.	Heat supply missing.	Provide higher supply temperature and ensure flow.
E003	Water temperature too high.	Heat supply too strong.	Provide lower supply temperature and ensure flow.
E007	Generator operation	Water is flowing through the pump hydraulics but there is no mains voltage to the pump.	Check mains voltage.
E010	Blocking	The rotor is continuously blocked.	Automatic restart is triggered.
E011	Dry run	Air in the pump.	Check volume flow / water pressure.
E021	Overload	Sluggish motor, pump is operated outside of its specifications (e.g. high module temperature). The speed is lower than during normal operation.	Check the ambient conditions.
E038	Pump running in emergency operation.	Temperature sensor for fluid temperature is defective.	Contact customer service.

11.2 Error messages

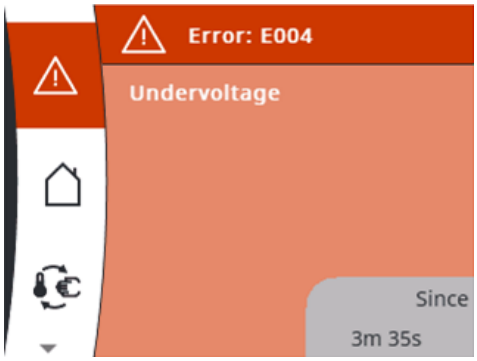

An error message is shown directly in red on the display and indicates the status of the error message.

→ The display shows the code, the description of the error message and how long the fault has existed for.
→ The pump switches off and persistently checks whether the fault is still present.
→ Remove cause of fault.

Code	Faults	Causes	Remedies
E004	Undervoltage	Power supply too low on mains side.	Check mains voltage.
E005	Overvoltage	Power supply too high on mains side.	Check mains voltage.
E009	Turbine operation	The flow through the pump is against the flow direction.	Check the flow rate, install non-return valves if necessary.
E010	Blocking	Rotor blocked	Activate manual restart or contact customer service.
E020	Excessive winding temperature	Motor overloaded	Allow motor to cool down.
E020	Excessive winding temperature	Fluid/ambient temperature too high.	Check setting and duty point.
E021	Motor overload	Deposits in the pump	Contact customer service.
E021	Motor overload	Fluid viscosity is too high (e.g. too much glycol).	Check operation conditions.
E023	Short-circuit	Motor current too high.	Contact customer service.
E025	Contacting/winding	Winding defective.	Contact customer service.
E030	Excessive temperature of module	Temperature inside the module too high.	Check operation conditions.
E036	Module defective	Electronics defective.	Contact customer service.

If the fault cannot be remedied, contact a specialist technician or the Wilo customer service.

12 Accessories

Accessories have to be ordered separately.

WARNING

Danger of injury or material damage from improper use!

- Never allow unauthorised work.
- Never carry out unauthorised conversions.
- Use authorised Wilo accessories only.

12.1 Wilo-Connect module

The pump can be equipped with all available Wilo-Connect modules (external modules). If a module is used, the main menu is extended by the main menu item in the display:

External module

Settings for the respective module can be made here.

The respective settings are described in the display and in the documentation of the Connect module.

Module installation

DANGER

Danger of death from electrical voltage!

Immediate danger of death if live components are touched.

- Before commencing work, switch off the power supply and secure it from being switched on again.
- Never reach into the open control module and never drop or insert objects into the opening.
- Never switch on the pump if the cover or the external module is not properly attached.

CAUTION

Moisture and leakage water can destroy the control module.

Only work on an open module in a dry environment.

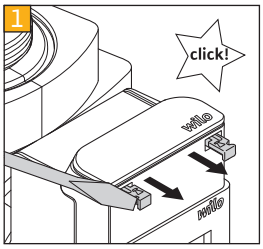

→ Open module cover
  – Using a screwdriver, pull out the latches on both sides of the module cover.

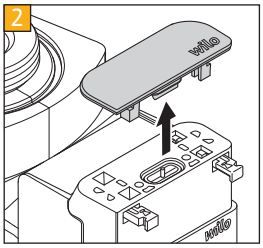

→ Carefully remove the module cover and store it in a safe place.

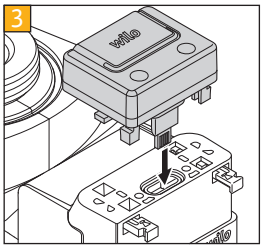

→ Remove the dust cap from the plug contact.
→ Carefully attach the Connect module.

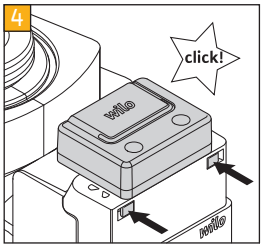

→ Push the latches on both sides of the module cover back in until they click into place.

NOTICE
The IP protection of the pump is only guaranteed with a fully locked module.

→ Restore power supply again.
→ Switch on the pump.

12.2 Smart Connect Module BT (Bluetooth)

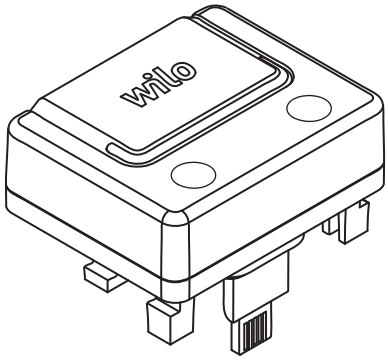

When using the Wilo-Smart Connect Module BT, the pump has a Bluetooth interface to connect to mobile end devices such as smartphones and tablets.

You can operate and adjust the pump and read out pump data using Wilo-Smart Connect in the Wilo-Assistant app.

Technical data

- → Frequency band: 2400 MHz ... 2483.5 MHz
- → Maximum radiated transmission power: < 10 dBm (EIRP)

Settings for establishing the connection are made via the main menu in the pump display:

External module	**Possible settings**
Bluetooth	
Bluetooth	Off/On
Connectable	Off/On
Dynamic PIN	Off/On

NOTICE

For additional information on the mode of operation, see the “Wilo-Smart Connect Module BT” user manual.

13 Disposal

13.1 Information on the collection of used electrical and electronic products

Proper disposal and appropriate recycling of this product prevents damage to the environment and putting your personal health at risk.

NOTICE

Disposal in domestic waste is prohibited!

In the European Union this symbol may be included on the product, the packaging or the accompanying documentation. It means that the electrical and electronic products in question must not be disposed of along with domestic waste.

Please note the following points to ensure proper handling, recycling and disposal of the used products in question:

- → Hand over these products at designated, certified collection points only.
- → Observe the locally applicable regulations!

Please consult your local municipality, the nearest waste disposal site, or the dealer who sold the product to you for information on proper disposal. See www.wilo-recycling.com for more information about recycling.

Subject to change without prior notice!

DECLARATION OF CONFORMITY

Stratos PICO-Z 20/...
Stratos PICO-Z 25/...
Stratos PICO-Z 30/...

We, the manufacturer, declare under our sole responsability that these glandless circulating pump types of the series,

(The serial number is marked on the product site plate)

in their delivered state comply with the following relevant directives and with the relevant national legislation:

_ Electrical Equipment (Safety) Regulations (SI 2016 No. 1101) amended

_ Electromagnetic Compatibility (EMC) Regulations (SI 2016 No. 1091) amended

_ Restriction of the Use of Certain Hazardous Substances (RoHS) in Electrical and Electronic Equipment Regulations (SI 2012 No. 3032) amended

comply also with the following relevant standards:

BS EN 60335-1:2012+A11:2014+A13:2017+A1:2019+A2:2019+A14:2019;
BS EN 60335-2-51:2003+A1:2008+A2:2012;
BS EN IEC 61000-6-1:2019; BS EN IEC 61000-6-2:2019;
BS EN IEC 61000-6-3:2021; BS EN IEC 61000-6-4:2019;
BS EN IEC 63000:2018;

Person who places the product on the market:

Wilo (UK) Ltd
2nd Avenue, Centrum 100
Burton upon Trent - DE14 2WJ
Staffordshire - United Kingdom

Dortmund,

ppa.

Digital unterschrieben von Holger Herchenhein
Datum: 2022.09.16 18:34:32 +02'00'

H. HERCHENHEIN
Senior Vice President - Group Quality & Qualification

Wilopark 1
D-44263 Dortmund

Declaration n°2223549-rev01

PC As-Sh n°4258259-GB-rev01

ORIGINAL DECLARATION

F_GQ_013-78

DECLARATION OF CONFORMITY

Stratos PICO-Z 20/...
Stratos PICO-Z 25/...
Stratos PICO-Z 30/...

We, the manufacturer, declare under our sole responsability that these glandless circulating pump types of the series,

(The serial number is marked on the product site plate)

in their delivered state comply with the following relevant directives and with the relevant national legislation:

_ELECTRICAL EQUIPMENT SAFETY SCHEME (EESS)

_ RADIOCOMMUNICATIONS LABELLING (ELECTROMAGNETIC COMPATIBILITY) NOTICE 2017

comply also with the following relevant standards:

AS/NZS 60335.1:2020; AS/NZS 60335.2.51:2020; AS/NZS 61000.6.1:2006 (R2016); AS/NZS 61000.6.2:2006 (R2016); AS/NZS 61000.6.3:2021; AS 61000.6.4:2020;

Person authorized to compile the technical file is:

WILO SE
Group Quality
Wilopark 1
D-44263 Dortmund

Dortmund,

ppa.

Digital unterschrieben
von Holger Herchenhein
Datum: 2022.10.10
10:03:18 +02'00'

H. HERCHENHEIN
Senior Vice President - Group Quality & Qualification

wilo

Wilopark 1
D-44263 Dortmund

Declaration n°2223579-rev01

PC As-Sh n°4258259-ANZ-rev01

ORIGINAL DECLARATION

F_GQ_013-79

CE

DECLARATION OF CONFORMITY
KONFORMITÄTSERKLÄRUNG

We, the manufacturer, declare under our sole responsibility that these glandless circulating pump types of the series,
Als Hersteller erklären wir unter unserer alleinigen Verantwortung, dass die Nassläufer-Umwälzpumpen der Baureihen,

Stratos PICO-Z 20/...
Stratos PICO-Z 25/...
Stratos PICO-Z 30/...

(The serial number is marked on the product site plate)
(Die Seriennummer ist auf dem Typenschild des Produktes angegeben)

in their delivered state comply with the following relevant directives and with the relevant national legislation:
in der gelieferten Ausführung folgenden einschlägigen Bestimmungen entsprechen 'und entsprechender nationaler Gesetzgebung:

_ 2014/35/EU - LOW VOLTAGE / NIEDERSPANNUNGSRICHTLINIE

_ 2014/30/EU - ELECTROMAGNETIC COMPATIBILITY / ELEKTROMAGNETISCHE VERTRÄGLICHKEIT - RICHTLINIE

_ 2011/65/EU + 2015/863 - RESTRICTION OF THE USE OF CERTAIN HAZARDOUS SUBSTANCES / BESCHRÄNKUNG DER VERWENDUNG BESTIMMTER GEFÄHRLICHER STOFFE-RICHTLINIE

comply also with the following relevant standards:
sowie auch den Bestimmungen zu folgenden harmonisierten europäischen Normen:

**EN 60335-1:2012+A11:2014+A13:2017+A1:2019+A2:2019+A14:2019+A15:2021;
EN 60335-2-51:2003+A1:2008+A2:2012; EN IEC 61000-6-1:2019; EN IEC 61000-6-2:2019;
EN IEC 61000-6-3:2021; EN IEC 61000-6-4:2019; EN IEC 63000:2018;**

Person authorized to compile the technical file is:
Bevollmächtigter für die Zusammenstellung der technischen Unterlagen ist:

WILO SE
Group Quality
Wilopark 1
D-44263 Dortmund

Dortmund,

ppa. H. Herchenhein

Digital unterschrieben von Holger Herchenhein
Datum: 2022.09.16 18:33:40 +02'00'

H. HERCHENHEIN
Senior Vice President - Group Quality & Qualification

wilo

Wilopark 1
D-44263 Dortmund

Declaration n°2223547-rev01

PC As-Sh n°4258259-EU-rev01

ORIGINAL DECLARATION / ORIGINAL-ERKLÄRUNG

F_GQ_013-78

EL — **Επίσημη μετάφραση της Διακήρυξης**

Εμείς, ο κατασκευαστής, δηλώνουμε με αποκλειστικά δική μας ευθύνη ότι οι υδρολίπαντοι κυκλοφορητές της σειράς
(Ο σειριακός αριθμός σημειώνεται στο ταμπελάκι του προϊόντος)
στην κατάσταση παράδοσης συμμορφώνονται με τις ακόλουθες σχετικές οδηγίες και τη σχετική εθνική νομοθεσία:

Stratos PICO-Z 20/...
Stratos PICO-Z 25/...
Stratos PICO-Z 30/...

|| 2014/35/EU - Χαμηλής Τάσης || 2014/30/EU - Ηλεκτρομαγνητικής συμβατότητας || 2011/65/EU + 2015/863 - για τον περιορισμό της χρήσης ορισμένων επικίνδυνων ουσιών

συμμορφώνεται επίσης με εναρμονισμένα πρότυπα:
EN 60335-1:2012+A11:2014+A13:2017+A1:2019+A2:2019+A14:2019+A15:2021;
EN 60335-2-51:2003+A1:2008+A2:2012; EN IEC 61000-6-1:2019; EN IEC 61000-6-2:2019;
EN IEC 61000-6-3:2021; EN IEC 61000-6-4:2019; EN IEC 63000:2018;

WILO SE
Group Quality
Wilopark 1
Πρόσωπο εξουσιοδοτημένο να συντάξει το τεχνικό αρχείο είναι: D-44263 Dortmund

ES — **Traducción oficial de la Declaración**

Nosotros, el fabricante, declaramos bajo nuestra exclusiva responsabilidad que los circuladores de rotor húmedo de la(s) serie(s)
(El nº de serie está marcado en la placa de características del producto)
cumple en la ejecución suministrada las siguientes disposiciones pertinentes y la legislación nacional correspondiente:

Stratos PICO-Z 20/...
Stratos PICO-Z 25/...
Stratos PICO-Z 30/...

|| 2014/35/EU - Baja Tensión || 2014/30/EU - Compatibilidad Electromagnética || 2011/65/EU + 2015/863 - Restricciones a la utilización de determinadas sustancias peligrosas

así como las disposiciones de las siguientes normas europeas armonizadas:
EN 60335-1:2012+A11:2014+A13:2017+A1:2019+A2:2019+A14:2019+A15:2021;
EN 60335-2-51:2003+A1:2008+A2:2012; EN IEC 61000-6-1:2019; EN IEC 61000-6-2:2019;
EN IEC 61000-6-3:2021; EN IEC 61000-6-4:2019; EN IEC 63000:2018;

WILO SE
Group Quality
Wilopark 1
Persona autorizada para la recopilación de los documentos técnicos: D-44263 Dortmund

FR — **Traduction officielle de la déclaration**

Nous, fabricant, déclarons sous notre seule responsabilité que les types de circulateurs des séries,
Le numéro de série est inscrit sur la plaque signalétique du produit)
dans leur état de livraison sont conformes aux dispositions des directives suivantes et aux législations nationales les transposant :

Stratos PICO-Z 20/...
Stratos PICO-Z 25/...
Stratos PICO-Z 30/...

|| 2014/35/EU - BASSE TENSION || 2014/30/EU - COMPATIBILITE ELECTROMAGNETIQUE || 2011/65/EU + 2015/863 - LIMITATION DE L'UTILISATION DE CERTAINES SUBSTANCES DANGEREUSES

sont également conformes aux dispositions des normes européennes harmonisées suivantes :
EN 60335-1:2012+A11:2014+A13:2017+A1:2019+A2:2019+A14:2019+A15:2021;
EN 60335-2-51:2003+A1:2008+A2:2012; EN IEC 61000-6-1:2019; EN IEC 61000-6-2:2019;
EN IEC 61000-6-3:2021; EN IEC 61000-6-4:2019; EN IEC 63000:2018;

WILO SE
Group Quality
Wilopark 1
Personne autorisée à constituer le dossier technique est : D-44263 Dortmund

IT — **Traduzione ufficiale della Dichiarazione**

Noi, il costruttore, dichiariamo sotto la nostra esclusiva responsabilità che questi tipi di circolatori a rotore bagnato della serie,
(Il numero di serie è riportato sulla targhetta del sito del prodotto)
allo stato di consegna sono conformi alle seguenti direttive pertinenti e alla legislazione nazionale pertinente:

Stratos PICO-Z 20/...
Stratos PICO-Z 25/...
Stratos PICO-Z 30/...

|| 2014/35/EU - Bassa Tensione || 2014/30/EU - Compatibilità Elettromagnetica || 2011/65/EU + 2015/863 - sulla restrizione dell'uso di determinate sostanze pericolose

rispettare anche le seguenti norme pertinenti:
EN 60335-1:2012+A11:2014+A13:2017+A1:2019+A2:2019+A14:2019+A15:2021;
EN 60335-2-51:2003+A1:2008+A2:2012; EN IEC 61000-6-1:2019; EN IEC 61000-6-2:2019;
EN IEC 61000-6-3:2021; EN IEC 61000-6-4:2019; EN IEC 63000:2018;

WILO SE
Group Quality
Wilopark 1
La persona autorizzata a compilare il fascicolo tecnico è: D-44263 Dortmund

PT — **Tradução oficial da Declaração**

Nós, o fabricante, declaramos sob nossa exclusiva responsabilidade que o(s) circulador(es) de rotor húmido da(s) série(s),
(O nº de série está marcado na placa de características do produto)
está em conformidade com a versão fornecida nas seguintes disposições relevantes e de acordo com a legislação nacional

Stratos PICO-Z 20/...
Stratos PICO-Z 25/...
Stratos PICO-Z 30/...

|| 2014/35/EU - Baixa Voltagem || 2014/30/EU - Compatibilidade Electromagnética || 2011/65/EU + 2015/863 - relativa à restrição do uso de determinadas substâncias perigosas

assim como as seguintes disposições das normas europeias
EN 60335-1:2012+A11:2014+A13:2017+A1:2019+A2:2019+A14:2019+A15:2021;
EN 60335-2-51:2003+A1:2008+A2:2012; EN IEC 61000-6-1:2019; EN IEC 61000-6-2:2019;
EN IEC 61000-6-3:2021; EN IEC 61000-6-4:2019; EN IEC 63000:2018;

WILO SE
Group Quality
Wilopark 1
Pessoa autorizada para a elaboração de documentos técnicos: D-44263 Dortmund

DA — **Officiel oversættelse af erklæringen**

Vi, producenten, erklærer under vores eget ansvar, at disse kirtelfrie cirkulationspumpetyper i serien,
(Serienummeret er markeret på produktpladen)
i deres leverede tilstand overholde følgende relevante direktiver og den relevante nationale lovgivning:

Stratos PICO-Z 20/...
Stratos PICO-Z 25/...
Stratos PICO-Z 30/...

|| 2014/35/EU - Lavspændings || 2014/30/EU - Elektromagnetisk Kompatibilitet || 2011/65/EU + 2015/863 - Begrænsning af anvendelsen af visse farlige stoffer

også overholde følgende relevante standarder:
EN 60335-1:2012+A11:2014+A13:2017+A1:2019+A2:2019+A14:2019+A15:2021;
EN 60335-2-51:2003+A1:2008+A2:2012; EN IEC 61000-6-1:2019; EN IEC 61000-6-2:2019;
EN IEC 61000-6-3:2021; EN IEC 61000-6-4:2019; EN IEC 63000:2018;

WILO SE
Group Quality
Wilopark 1
Person, der er autoriseret til at udarbejde den tekniske fil, er: D-44263 Dortmund

ET — **Deklaratsiooni ametlik tõlge**

Meie, tootja, kuulutame ainuisikulisel vastutusel, et need seeria näärmeteta tsirkulatsioonipumbad,
(Seerianumber on märgitud toote saidi plaadile)
oma tarnitud olekus järgima järgmisi asjakohaseid direktiive ja asjakohaseid siseriiklikke õigusakte:

Stratos PICO-Z 20/...
Stratos PICO-Z 25/...
Stratos PICO-Z 30/...

|| 2014/35/EU - Madalpingeseadmed || 2014/30/EU - Elektromagnetilist Ühilduvust || 2011/65/EU + 2015/863 - teatavate ohtlike ainete kasutamise piiramise kohta

vastama ka järgmistele asjakohastele standarditele:
EN 60335-1:2012+A11:2014+A13:2017+A1:2019+A2:2019+A14:2019+A15:2021;
EN 60335-2-51:2003+A1:2008+A2:2012; EN IEC 61000-6-1:2019; EN IEC 61000-6-2:2019;
EN IEC 61000-6-3:2021; EN IEC 61000-6-4:2019; EN IEC 63000:2018;

WILO SE
Group Quality
Wilopark 1
Tehnilise toimiku koostamiseks on volitatud isik: D-44263 Dortmund

FI — **Julistuksen virallinen käännös**

Me valmistaja vakuutamme yksinomaisella vastuullamme, että nämä sarjan tiivisteettömät kiertovesipumput,
(Sarjanumero on merkitty tuotekohtaiseen kilpeen)
toimitetussa tilassa noudattavat seuraavia asiaankuuluvia direktiivejä ja asiaa koskevaa kansallista lainsäädäntöä:

Stratos PICO-Z 20/...
Stratos PICO-Z 25/...
Stratos PICO-Z 30/...

|| 2014/35/EU - Matala Jännite || 2014/30/EU - Sähkömagneettinen Yhteensopivuus || 2011/65/EU + 2015/863 - tiettyjen vaarallisten aineiden käytön rajoittamisesta

noudattamaan myös seuraavia asiaankuuluvia standardeja:
EN 60335-1:2012+A11:2014+A13:2017+A1:2019+A2:2019+A14:2019+A15:2021;
EN 60335-2-51:2003+A1:2008+A2:2012; EN IEC 61000-6-1:2019; EN IEC 61000-6-2:2019;
EN IEC 61000-6-3:2021; EN IEC 61000-6-4:2019; EN IEC 63000:2018;

WILO SE
Group Quality
Wilopark 1
Henkilö, jolla on valtuudet koota tekninen tiedosto, on: D-44263 Dortmund

IS — **Opinber þýðing á yfirlýsingunni**

Við framleiðandinn lýsum því yfir undir ábyrgð okkar einungis að þessar kirtillausu hringlaga dælugerðir seríunnar,
(Raðnúmerið er merkt á plötunni á vörustaðnum)
í afhentu ástandi í samræmi við eftirfarandi viðeigandi tilskipanir og viðeigandi innlenda löggjöf:

Stratos PICO-Z 20/...
Stratos PICO-Z 25/...
Stratos PICO-Z 30/...

|| 2014/35/EU - Lágspennutilskipun || 2014/30/EU - Rafseguls-samhæfni-tilskipun || 2011/65/EU + 2015/863 - Takmörkun á notkun tiltekinna hættulegra efna

uppfylla einnig eftirfarandi viðeigandi staðla:
EN 60335-1:2012+A11:2014+A13:2017+A1:2019+A2:2019+A14:2019+A15:2021;
EN 60335-2-51:2003+A1:2008+A2:2012; EN IEC 61000-6-1:2019; EN IEC 61000-6-2:2019;
EN IEC 61000-6-3:2021; EN IEC 61000-6-4:2019; EN IEC 63000:2018;

WILO SE
Group Quality
Wilopark 1
Sá sem hefur heimild til að taka saman tækniskrána er: D-44263 Dortmund

LT — **Oficialus deklaracijos vertimas**

Mes, kaip gamintojas, savo atsakomybės ribose deklaruojame, kad šios serijos šlapio rotoriaus siurblių modeliai,
(Serijos numeris pažymėtas ant produkto lentelės)
taip kaip pristatyti, atitinka sekančias aktualias direktyvas ir nacionalines teisės normas bei reglamentus:

Stratos PICO-Z 20/...
Stratos PICO-Z 25/...
Stratos PICO-Z 30/...

|| 2014/35/EU - Žema įtampa || 2014/30/EU - Elektromagnetinis Suderinamumas || 2011/65/EU + 2015/863 - dėl tam tikrų pavojingų medžiagų naudojimo apribojimo

taip pat atitinka sekančius aktualius standartus:
EN 60335-1:2012+A11:2014+A13:2017+A1:2019+A2:2019+A14:2019+A15:2021;
EN 60335-2-51:2003+A1:2008+A2:2012; EN IEC 61000-6-1:2019; EN IEC 61000-6-2:2019;
EN IEC 61000-6-3:2021; EN IEC 61000-6-4:2019; EN IEC 63000:2018;

WILO SE
Group Quality
Wilopark 1
Asmuo įgaliotas sudaryti techninius dokumentus yra: D-44263 Dortmund

LV — **Deklarācijas oficiālais tulkojums**

Mēs, ražotājs, ar pilnu atbildību paziņojam, ka šie slapjā rotora cirkulācijas sūkņu tipi,
(Sērijas numurs ir norādīts uz izstrādājuma plāksnītes)
piegādātāja valstī atbilst šādām attiecīgām direktīvām un attiecīgiem valsts tiesību aktiem:

Stratos PICO-Z 20/...
Stratos PICO-Z 25/...
Stratos PICO-Z 30/...

|| 2014/35/EU - Zemsprieguma || 2014/30/EU - Elektromagnētiskās Saderības || 2011/65/EU + 2015/863 - par dažu bīstamu vielu izmantošanas ierobežošanu 2011/65/UE

atbilst arī sekojošiem attiecīgiem standartiem:
EN 60335-1:2012+A11:2014+A13:2017+A1:2019+A2:2019+A14:2019+A15:2021;
EN 60335-2-51:2003+A1:2008+A2:2012; EN IEC 61000-6-1:2019; EN IEC 61000-6-2:2019;
EN IEC 61000-6-3:2021; EN IEC 61000-6-4:2019; EN IEC 63000:2018;

WILO SE
Group Quality
Wilopark 1
Persona pilnvarota sastādīt tehnisko dokumentāciju: D-44263 Dortmund

NL — **Officiële vertaling van de verklaring**

Wij, de fabrikant, verklaren onder onze eigen verantwoordelijkheid dat deze natloper-circulatiepompen van de serie,
(Het serienummer staat vermeld op het naamplaatje van het product)
in de geleverde versie voldoen aan de volgende relevante bepalingen en aan de overeenkomstige nationale wetgeving:

Stratos PICO-Z 20/...
Stratos PICO-Z 25/...
Stratos PICO-Z 30/...

|| 2014/35/EU - Laagspannings || 2014/30/EU - Elektromagnetische Compatibiliteit || 2011/65/EU + 2015/863 - betreffende beperking van het gebruik van bepaalde gevaarlijke stoffen

voldoen ook aan de volgende relevante normen:
EN 60335-1:2012+A11:2014+A13:2017+A1:2019+A2:2019+A14:2019+A15:2021;
EN 60335-2-51:2003+A1:2008+A2:2012; EN IEC 61000-6-1:2019; EN IEC 61000-6-2:2019;
EN IEC 61000-6-3:2021; EN IEC 61000-6-4:2019; EN IEC 63000:2018;

WILO SE
Group Quality
Wilopark 1
De persoon die bevoegd is om het technische bestand samen te stellen is: D-44263 Dortmund

NO — **Offisiell oversettelse av erklæring**

Vi som produsent erklærer herved vårt ansvar at våtløper sirkulasjonspumper under type serie,
(serienummeret er markert på pumpeskilt)
I levert tilstand vil produkt overholde følgende direktiver og relevant nasjonal lovgivning

Stratos PICO-Z 20/...
Stratos PICO-Z 25/...
Stratos PICO-Z 30/...

|| 2014/35/EU - Lavspenningsdirektiv || 2014/30/EU - EMV–Elektromagnetisk kompatibilitet || 2011/65/EU + 2015/863 - Begrensning av bruk av visse farlige stoffer

Oppfølger også relevante standarder
EN 60335-1:2012+A11:2014+A13:2017+A1:2019+A2:2019+A14:2019+A15:2021;
EN 60335-2-51:2003+A1:2008+A2:2012; EN IEC 61000-6-1:2019; EN IEC 61000-6-2:2019;
EN IEC 61000-6-3:2021; EN IEC 61000-6-4:2019; EN IEC 63000:2018;

WILO SE
Group Quality
Wilopark 1
Vedkommendesom er autorisert til å sammenstille teknisk fil er: D-44263 Dortmund

SV — **Officiell översättning av försäkran**

Vi, tillverkaren, försäkrar under eget ansvar att de våtlöpande cirkulationspumparna i serien
(Serienumret finns utmärkt på produktens dataskylt)
i det utförande de levererades överrenstämmer med följande relevanta direktiv och relevant nationell lagstiftning

Stratos PICO-Z 20/...
Stratos PICO-Z 25/...
Stratos PICO-Z 30/...

|| 2014/35/EU - Lågspännings || 2014/30/EU - Elektromagnetisk Kompatibilitet || 2011/65/EU + 2015/863 - begränsning av användning av vissa farliga ämnen

överrenstämmer också med följande relevanta standarder:
EN 60335-1:2012+A11:2014+A13:2017+A1:2019+A2:2019+A14:2019+A15:2021;
EN 60335-2-51:2003+A1:2008+A2:2012; EN IEC 61000-6-1:2019; EN IEC 61000-6-2:2019;
EN IEC 61000-6-3:2021; EN IEC 61000-6-4:2019; EN IEC 63000:2018;

WILO SE
Group Quality
Wilopark 1
Person behörig att sammanställa denna tekniska fil är: D-44263 Dortmund

GA — **Eadar-theangachadh oifigeil den Ghairm**

Bidh sinn, an neach-dèanamh, a 'foillseachadh fon aon uallach againn gu bheil na seòrsachan pumpa cuairteachaidh glandless seo den t-sreath,
(Tha an àireamh sreathach air a chomharrachadh air clàr làrach an toraidh)
anns an stàit lìbhrigidh aca gèilleadh ris na stiùiridhean buntainneach a leanas agus ris an reachdas nàiseanta buntainneach:

Stratos PICO-Z 20/...
Stratos PICO-Z 25/...
Stratos PICO-Z 30/...

|| 2014/35/EU - Ísealvoltais || 2014/30/EU - Comhoiriúnacht Leictreamaighnéadach || 2011/65/EU + 2015/863 - Srian ar an úsáid a bhaint as substaintí guaiseacha acu

gèilleadh cuideachd ris na h-inbhean iomchaidh a leanas:
EN 60335-1:2012+A11:2014+A13:2017+A1:2019+A2:2019+A14:2019+A15:2021;
EN 60335-2-51:2003+A1:2008+A2:2012; EN IEC 61000-6-1:2019; EN IEC 61000-6-2:2019;
EN IEC 61000-6-3:2021; EN IEC 61000-6-4:2019; EN IEC 63000:2018;

WILO SE
Group Quality
Wilopark 1
Is e an neach le ùghdarras am faidhle teicnigeach a chur ri chèile: D-44263 Dortmund

BG — **Официален превод на Декларация**

Ние, като производител, декларираме на собствена отговорност, че помпите с мокър ротор от серията,

Серийните номера са обозначени на табелата на продукта

В доставения им вид са в съответствие приложимите за държавата директиви и законодателство

Stratos PICO-Z 20/...
Stratos PICO-Z 25/...
Stratos PICO-Z 30/...

|| 2014/35/EU - Ниско Напрежение || 2014/30/EU - Електромагнитна съвместимост || 2011/65/EU + 2015/863 - относно ограничението за употребата на определени опасни вещества

Също така отговарят на следните изискуеми норми:

EN 60335-1:2012+A11:2014+A13:2017+A1:2019+A2:2019+A14:2019+A15:2021;
EN 60335-2-51:2003+A1:2008+A2:2012; EN IEC 61000-6-1:2019; EN IEC 61000-6-2:2019;
EN IEC 61000-6-3:2021; EN IEC 61000-6-4:2019; EN IEC 63000:2018;

WILO SE
Group Quality
Wilopark 1

Лицето, упълномощено да състави техническия доклад е: D-44263 Dortmund

CS — **Oficiální překlad Prohlášení**

My, výrobce, prohlašujeme na základě naší výhradní odpovědnosti, že tyto bezucpávkové oběhové čerpadlo řady,

(Sériové číslo je uvedeno na výrobním štítku)

ve svém dodaném stavu dodržovat následující relevantní směrnice a příslušnou národní legislativu:

Stratos PICO-Z 20/...
Stratos PICO-Z 25/...
Stratos PICO-Z 30/...

|| 2014/35/EU - Nízké Napětí || 2014/30/EU - Elektromagnetická Kompatibilita || 2011/65/EU + 2015/863 - Omezení používání některých nebezpečných látek

dodržovat také následující relevantní normy:

EN 60335-1:2012+A11:2014+A13:2017+A1:2019+A2:2019+A14:2019+A15:2021;
EN 60335-2-51:2003+A1:2008+A2:2012; EN IEC 61000-6-1:2019; EN IEC 61000-6-2:2019;
EN IEC 61000-6-3:2021; EN IEC 61000-6-4:2019; EN IEC 63000:2018;

WILO SE
Group Quality
Wilopark 1

Osoba oprávněná sestavit technickou dokumentaci je: D-44263 Dortmund

HR — **Službeni prijevod Deklaracije**

Mi, proizvođač, izjavljujemo pod isključivom odgovornošću da ova mokrorotorna pumpa tipa iz serije,

(Serijski broj je označen na tipskoj pločici proizvoda)

u isporučenom stanju odgovara sljedećim relevantnim direktivama i relevantnom nacionalnom zakonodavstvu:

Stratos PICO-Z 20/...
Stratos PICO-Z 25/...
Stratos PICO-Z 30/...

|| 2014/35/EU - Smjernica o niskom naponu || 2014/30/EU - Elektromagnetna kompatibilnost - smjernica || 2011/65/EU + 2015/863 - ograničenju uporabe određenih opasnih tvari

u skladu također i sa sljedećim relevantnim standardima:

EN 60335-1:2012+A11:2014+A13:2017+A1:2019+A2:2019+A14:2019+A15:2021;
EN 60335-2-51:2003+A1:2008+A2:2012; EN IEC 61000-6-1:2019; EN IEC 61000-6-2:2019;
EN IEC 61000-6-3:2021; EN IEC 61000-6-4:2019; EN IEC 63000:2018;

WILO SE
Group Quality
Wilopark 1

Osoba ovlaštena za sastavljanje tehničke dokumentacije: D-44263 Dortmund

HU — **A Nyilatkozat hivatalos fordítása**

Mi, a gyártó, saját felelősségünkre kijelentjük, hogy a sorozat nedvestengelyű keringető szivattyúi,

(A sorozatszámot a termék adattábláján feltüntetik)

leszállított kivitelükben feleljenek meg a következő vonatkozó irányelveknek és a vonatkozó nemzeti irányelveknek

Stratos PICO-Z 20/...
Stratos PICO-Z 25/...
Stratos PICO-Z 30/...

|| 2014/35/EU - Alacsony Feszültségű || 2014/30/EU - Elektromágneses összeférhetőségre || 2011/65/EU + 2015/863 - egyes veszélyes való alkalmazásának korlátozásáról

megfeleljen a következő vonatkozó előírásoknak is:

EN 60335-1:2012+A11:2014+A13:2017+A1:2019+A2:2019+A14:2019+A15:2021;
EN 60335-2-51:2003+A1:2008+A2:2012; EN IEC 61000-6-1:2019; EN IEC 61000-6-2:2019;
EN IEC 61000-6-3:2021; EN IEC 61000-6-4:2019; EN IEC 63000:2018;

WILO SE
Group Quality
Wilopark 1

A műszaki dokumentáció összeállítására jogosult személy: D-44263 Dortmund

PL — **Oficjalne tłumaczenie Deklaracji Zgodności**

Producent oświadcza na wyłączną odpowiedzialność, że typoszeregi bez dławnicowych pomp obiegowych z serii

(Numer seryjny znajduje się na tabliczce znamionowej produktu)

w stanie dostarczonym są zgodne z następującymi dyrektywami i przepisami krajowymi mającymi zastosowanie:

Stratos PICO-Z 20/...
Stratos PICO-Z 25/...
Stratos PICO-Z 30/...

|| 2014/35/EU - Niskich Napięć || 2014/30/EU - Kompatybilności Elektromagnetycznej || 2011/65/EU + 2015/863 - sprawie ograniczenia stosowania niektórych niebezpiecznych substancji

są również zgodne z następującymi specyfikacjami technicznymi mającymi zastosowanie:

EN 60335-1:2012+A11:2014+A13:2017+A1:2019+A2:2019+A14:2019+A15:2021;
EN 60335-2-51:2003+A1:2008+A2:2012; EN IEC 61000-6-1:2019; EN IEC 61000-6-2:2019;
EN IEC 61000-6-3:2021; EN IEC 61000-6-4:2019; EN IEC 63000:2018;

WILO SE
Group Quality
Wilopark 1

Osoba upoważniona do sporządzenia dokumentacji technicznej: D-44263 Dortmund

RO

Traducere oficială a Declarației

Noi, producătorul, declarăm sub responsabilitatea noastră exclusivă că aceste tipuri de pompe de recirculare cu rotor umed, din seria

(Numărul serial este marcat pe plăcuta de identificare a produsului)

în starea lor livrată, respectă următoarele directive relevante și legislația națională relevantă:

Stratos PICO-Z 20/...
Stratos PICO-Z 25/...
Stratos PICO-Z 30/...

|| 2014/35/EU - Joasă Tensiune || 2014/30/EU - Compatibilitate Electromagnetică || 2011/65/EU + 2015/863 - privind restricțiile de utilizare a anumitor substanțe periculoase

sunt conforme, de asemenea, cu următoarele standarde relevante

EN 60335-1:2012+A11:2014+A13:2017+A1:2019+A2:2019+A14:2019+A15:2021; EN 60335-2-51:2003+A1:2008+A2:2012; EN IEC 61000-6-1:2019; EN IEC 61000-6-2:2019; EN IEC 61000-6-3:2021; EN IEC 61000-6-4:2019; EN IEC 63000:2018;

WILO SE
Group Quality
Wilopark 1

Persoana autorizată sa compileze dosarul tehnic este: D-44263 Dortmund

SK

Oficiálny preklad vyhlásenia

My, výrobca, na vlastnú zodpovednosť vyhlasujeme, že tieto bezucpávkové obehové čerpadlá radu,

(Sériové číslo je uvedené na štítku s výrobkom)

v dodanom stave zodpovedajú nasledujúcim relevantným smerniciam a príslušným národným právnym predpisom:

Stratos PICO-Z 20/...
Stratos PICO-Z 25/...
Stratos PICO-Z 30/...

|| 2014/35/EU - Nízkonapäťové zariadenia || 2014/30/EU - Elektromagnetickú Kompatibilitu || 2011/65/EU + 2015/863 - obmedzení používania určitých nebezpečných látok

spĺňať aj nasledujúce relevantné normy:

EN 60335-1:2012+A11:2014+A13:2017+A1:2019+A2:2019+A14:2019+A15:2021; EN 60335-2-51:2003+A1:2008+A2:2012; EN IEC 61000-6-1:2019; EN IEC 61000-6-2:2019; EN IEC 61000-6-3:2021; EN IEC 61000-6-4:2019; EN IEC 63000:2018;

WILO SE
Group Quality
Wilopark 1

Osoba oprávnená zostaviť technickú dokumentáciu je: D-44263 Dortmund

SL

Uradni prevod izjave

Mi, kot proizvajalci, z polno odgovornostjo izjavljamo, da te vrste obtočnih črpalk brez žleze serije,

(Serijska številka je označena na napisni tablici izdelka)

v stanju dostave ravnajo v skladu z naslednjimi ustreznimi direktivami in ustrezno nacionalno zakonodajo:

Stratos PICO-Z 20/...
Stratos PICO-Z 25/...
Stratos PICO-Z 30/...

|| 2014/35/EU - Nizka Napetost || 2014/30/EU - Elektromagnetno Združljivostjo || 2011/65/EU + 2015/863 - o omejevanju uporabe nekaterih nevarnih snovi

izpolnjujejo tudi naslednje ustrezne standarde:

EN 60335-1:2012+A11:2014+A13:2017+A1:2019+A2:2019+A14:2019+A15:2021; EN 60335-2-51:2003+A1:2008+A2:2012; EN IEC 61000-6-1:2019; EN IEC 61000-6-2:2019; EN IEC 61000-6-3:2021; EN IEC 61000-6-4:2019; EN IEC 63000:2018;

WILO SE
Group Quality
Wilopark 1

Oseba, pooblaščena za sestavo tehnične datoteke, je: D-44263 Dortmund

TR

CE Uygunluk Beyanı

Biz üretici olarak, sirkülasyon pompa tip serilerinin tamamen kendi sorumluluğumuz altında olduğunu beyan ederiz.

Seri numarası ürünün üzerindedir.

teslim edildiği şekliyle aşağıdaki ilgili hükümler ile uyumludur;

Stratos PICO-Z 20/...
Stratos PICO-Z 25/...
Stratos PICO-Z 30/...

|| 2014/35/EU - Alçak Gerilim Yönetmeliği || 2014/30/EU - Elektromanyetik Uyumluluk Yönetmeliği || 2011/65/EU + 2015/863 - Belirli tehlikeli maddelerin bir kullanımını sınırlandıran

İlgili uyumlaştırılmış Avrupa standartları;

EN 60335-1:2012+A11:2014+A13:2017+A1:2019+A2:2019+A14:2019+A15:2021; EN 60335-2-51:2003+A1:2008+A2:2012; EN IEC 61000-6-1:2019; EN IEC 61000-6-2:2019; EN IEC 61000-6-3:2021; EN IEC 61000-6-4:2019; EN IEC 63000:2018;

WILO SE
Group Quality
Wilopark 1

Teknik dosyayı düzenleyen yetkili kişi; D-44263 Dortmund

MT

Traduzzjoni uffiċjali tad-Dikjarazzjoni

Aħna, il-manifattur, niddikjaraw taħt ir-responsabbiltà unika tagħna li dawn it-tipi ta 'pompa ċirkolanti mingħajr glandola tas-serje,

(In-numru tas-serje huwa mmarkat fuq il-pjanċa tas-sit tal-prodott)

fl-istat mogħtija tagħhom jikkonformaw mad-direttivi rilevanti li ġejjin u mal-leġislazzjoni nazzjonali relevanti:

Stratos PICO-Z 20/...
Stratos PICO-Z 25/...
Stratos PICO-Z 30/...

|| 2014/35/EU - Vultaġġ Baxx || 2014/30/EU - Kompatibbiltà Elettromanjetika || 2011/65/EU + 2015/863 - dwar ir-restrizzjoni tal-użu ta' ċerti sustanzi perikoluži

jikkonformaw ukoll mal-istandards rilevanti li ġejjin:

EN 60335-1:2012+A11:2014+A13:2017+A1:2019+A2:2019+A14:2019+A15:2021; EN 60335-2-51:2003+A1:2008+A2:2012; EN IEC 61000-6-1:2019; EN IEC 61000-6-2:2019; EN IEC 61000-6-3:2021; EN IEC 61000-6-4:2019; EN IEC 63000:2018;

WILO SE
Group Quality
Wilopark 1

Persuna awtorizzata biex tiġbor il-fajl tekniku hija: D-44263 Dortmund







wilo

Pioneering for You



Local contact at
www.wilo.com/contact

WILO SE
Wilopark 1
44263 Dortmund
Germany
T +49 (0)231 4102-0
F +49 (0)231 4102-7363
wilo@wilo.com
www.wilo.com